TOWN OF BRUNSWICK
STAFF REVIEW COMMITTEE

STAFF REVIEW COMMITTEE
- AGENDA -
BRUNSWICK SCHOOL DEPARTMENT BUILDING
46 FEDERAL STREET, BRUNSWICK

THURSDAY, FEBRUARY 20, 2014, 10:00 A.M.

1. **Case # 14-007 – Botany Place Subdivision Amendment:** The Committee will review and provide a recommendation to the Planning Board regarding a Subdivision Amendment application, pertaining to proposed revisions to the phasing (Phases 7-10), condominium layout, utility, stormwater, and recreational space plans. Assessor's Map U19, Lot 2, in the Residential 4 (R4) Meredith Dr. – West McKeen St. Zoning District.

2. **Other Business**

This agenda is mailed to owners of property within 200 feet of proposed development sites. In cases where Committee action is pending this agenda serves as notice of same. In cases where the Committee's role is to advise the Planning Board, this agenda is mailed as a courtesy along with notice of the Planning Board meeting.

The Staff Review Committee meeting is open to the public. All are invited to attend. For further information call Anna Breinich at the Brunswick Department of Planning and Development (725-6660).

January 22, 2014

992-7

Jeremy Doxsee, Town Planner
Town of Brunswick
28 Federal Street
Brunswick, Maine 04011

Re: Minor Amendment Application
Botany Place – Phase 7
Tax Map U-19, Lot 2

Dear Jeremy,

Enclosed please find ten (10) copies of the Minor Amendment Application Form, revised plans, and supporting documentation for revisions to Phase 7 of the Botany Place Condominiums. At this time, Botany Place, LLC proposes to revise the layout of the condominium units for Phase 7, including units 44, 53-63, 77-80, and 81-84 as identified on the Master Plan. As the proposed revisions to the enclosed plans reflect only revisions to the footprints and layouts of the units within Phase 7 and do not affect the overall density of the development, we respectfully request that a minor Amendment application be granted for the project.

In addition to the revisions to the buildings, utility and storm drain locations have been revised to better accommodate the new layout. We have coordinated with the Brunswick Sewer District and the Brunswick and Topsham Water District to ensure they are satisfied with the revisions to their respective systems. The new utility and storm drain layout is shown on the enclosed plans.

In conversations with the Town regarding this project, there has been some concern with impacts to the stormwater system, and specifically, increases in impervious area because of the multiple changes to the project since initial approval. A letter to Anna Breinich, Director of Planning and Development, has been enclosed with this submission addressing the impacts and ensuring that there will be no adverse impact to the existing stormwater system and the project is still in conformance to the previously approved stormwater management plan.

Should you have any questions or require additional information, please contact us.

Very truly yours,

Curtis Y. Neufeld
Vice President

Enclosures

cc: Scott Howard

SITELINES, PA
ENGINEERS ▪ PLANNERS ▪ SURVEYORS ▪ LANDSCAPE ARCHITECTS
8 Cumberland Street ▪ Brunswick, ME 04011 ▪ TEL 207-725-1200 ▪ FAX 207-725-1114 ▪ www.sitelinespa.com

Town of Brunswick, Maine

INCORPORATED 1739

DEPARTMENT OF PLANNING AND DEVELOPMENT

28 FEDERAL STREET

BRUNSWICK, MAINE 04011-1583

TELEPHONE 207-725-6660

FAX 207-725-6663

TOWN OF BRUNSWICK
MINOR MODIFICATION APPLICATION

Section 403.3 of the Brunswick Zoning Ordinance outlines the conditions under which the Director of Planning & Development may approve a minor modification to a previously approved site plan, subdivision or Special Permit. This document describes the process for applying for a minor modification.

Planning and Development Department

Minor modifications to approved site plans, subdivisions, and Special Permits may be granted by the Director of Development and Planning, in consultation with the Town Planner, Codes Enforcement Officer, and the Public Works Director, within 30 days after the submission of a complete application, provided that the modification does not materially alter the layout or scale of the development or its impact on its surroundings, nor:

(1) Increase the number of lots or dwelling units;
(2) Violate any provisions of any Town ordinance;
(3) Reduce the effectiveness of the approved landscaping, screening or buffering of the site;
(4) Reduce the number of parking spaces or significantly alter on-site vehicular circulation; or
(5) Significantly alter drainage patterns.

The procedure for processing requests for minor modifications shall be as follows:

(1) The applicant shall submit 5 copies of the plan showing the proposed revisions and shall pay a one-time fee of $50.

(2) Within 10 days, the Director of Planning and Development shall determine if the application constitutes a minor modification.

(3) If the application is a minor modification, written notification of the pending modification shall be provided to all adjoining property owners at least 10 days prior to a decision being rendered by the Director of Planning and Development.

(4) If the application is found not to be a minor modification, the request shall be scheduled for the next Planning Board agenda for review.

(5) If the Director of Planning and Development does not approve an application, the request shall be scheduled for the next Planning Board agenda for review.

Case #:_____

MINOR MODIFICATION / AMENDMENT APPLICATION

1. Project Applicant:

   Name: Botany Place, L.L.C. Attn: Scott and Valerie Howard
   Address: P.O. Box 811
   Brunswick, Maine 04011
   Phone Number: 207-729-4324

2. Project Property Owner:

   Name: _____
   Address: _____
   _____
   Phone Number: _____

3. Authorized Representative: (If Different Than Applicant)

   Name: Sitelines, PA Attn: Curtis Y. Neufeld, P.E.
   Address: 8 Cumberland Street
   Brunswick, Maine 04011
   Phone Number: 207-725-1200 ext 12

4. Physical Location of Property Being Affected:

   Address: Botany Place Drive

5. Tax Assessor's Map #U19 Lot #2 of subject property.

6. Underlying Zoning District Residential 4

7. Describe nature of the proposed change (use separate sheet if necessary):

   Revisions to the configuration of Phase 7. Refer to Cover Letter.

Applicant's
Signature_____

January 22, 2014

992-7

Anna Breinich, Director Planning & Development
Town of Brunswick
28 Federal Street
Brunswick, Maine 04011

Re: Stormwater Analysis Update
Botany Place – Phase 7
Brunswick, Maine

Dear Anna:

Attached please find a copy of an Amended Site Plan for Phase 7 of the Botany Place Condominiums. The amendment includes revisions to the building footprints and locations and corresponding adjustments to the grading and utility connections. The essential elements of the development remain unchanged, however. The units are arranged to face and be accessed from private loop roads served by Botany Place Drive. Stormwater runoff will be conveyed via swales to a storm drain system and ultimately to the wet pond designed to serve the overall development. The number of units remains essentially the same. The configuration of the storm drain system and the tributary areas is consistent, if slightly modified, to the original design.

As a condition of approval for the minor modification granted for Phase 6, it was stipulated the stormwater analysis be updated prior to approval of any additional modifications to the approved plans. It is understood the existing and proposed changes made to the master plan and overall development for Botany Place may have resulted in the construction of more impervious area than was originally permitted.

As part of our design analysis for Phase 7 of Botany Place, we compared all previously permitted phases of Botany Place with what was constructed. To assist our review, aerial photographs and site visits were used to confirm what has been constructed to date. Once it was determined what had been constructed, we compared the permitted design of the current & future phases with what is currently proposed.

The original stormwater management plan included a detailed analysis that included a stormwater model comprised of dozens of subcatchments and routing elements. Most of these subcatchments and elements have been slightly changed along with the modifications to the phases; however, the changes are typically minor with regard to

SITELINES, PA
ENGINEERS ▪ PLANNERS ▪ SURVEYORS ▪ LANDSCAPE ARCHITECTS
8 Cumberland Street ▪ Brunswick, ME 04011 ▪ TEL 207-725-1200 ▪ FAX 207-725-1114 ▪ www.sitelinespa.com

impervious area and drainage boundaries. The collection of stormwater by means of catch basins and conveyance to a single wet pond has remained consistent. Since the impact of the peak rate and volume of runoff is primarily influenced by total impervious area, this parameter was used to evaluate the net change to the development.

As permitted, the proposed development of Botany Place was to result in 428,152 s.f. (9.83 acres) of impervious area. This area included some existing impervious areas which drain to stormwater features within Botany Place. As a result of the existing and proposed changes to the master plan, the development will result in 432,984 s.f. (9.94 acres), or an increase in impervious area of 4,832 s.f. (or 1.1%) from the permitted levels. While the changes to the master plan result in an increase in impervious area, the change is insignificant relative to the entire development. Based on our calculations, the increase in impervious area would result in less than a 0.10-foot increase in water level in the wet pond for the 25-year storm event.

The permitted design included multiple small ponding areas within Phase 7 and future phases. These ponding areas have been maintained to the extent practicable and should attenuate any potential increase in stormwater runoff.

Based on our review of the information as described above, the cumulative changes do not result in an adverse impact to the existing stormwater system. The development is and will continue to be in compliance wit its permits. Should you have any questions or require additional information, please contact us.

Very truly yours,

Curtis Y. Neufeld, P.E.
Vice President

Enclosures

cc: Scott Howard

SITELINES

DESIGN CONSULTANTS:

ARCHITECT:
BUILDING RESOURCES, INC.
TOOD WORTHLEY, ARCHITECT
289 ROUTE ONE
EDGECOMBE, MAINE 04556
207-882-9280

CIVIL ENGINEERS:
SITELINES, P.A.
CHARLES R. WIERCINSKI, P.E.
8 CUMBERLAND STREET
BRUNSWICK, MAINE 04011
207-725-1200

LANDSCAPE ARCHITECTURE:
F.A. CUSHING LANDSCAPE ARCHITECTURE, INC.
FRANK A. CUSHING,RLA
8 CUMBERLAND STREET
BRUNSWICK, MAINE, 04011
207-729-7728

SURVEY:
DIRIGO LAND SERVICES, INC.
BRUCE MARTINSON, PLS
323 BRUNSWICK ROAD
BATH, MAINE 04530
207-442-7500

WETLAND:
WOODLOT ALTERNATIVES, INC.
30 PARK DRIVE
TOPSHAM, MAINE 04086

UTILITY CONTACTS:

CODE ENFORCEMENT:
JEFF HUTCHINSON
TOWN OF BRUNSWICK
28 FEDERAL STREET
BRUNSWICK, MAINE 04011
207-725-6651

ELECTRIC SERVICE:
CENTRAL MAINE POWER
DEBRA WHITE
280 BATH ROAD
BRUNSWICK, MAINE 04011
207-721-8054

TELEPHONE SERVICE:
VERIZON
ANDREA K. HANSON, ENGINEER
BATH ROAD (P.O. BOX 360)
BRUNSWICK, MAINE 04011
207-442-8018

CABLE SERVICE:
SUSQUEHANNA COMMUNICATIONS
CONSTRUCTION OFFICE
336 BATH ROAD
BRUNSWICK, MAINE, 04011
207-729-6660

WATER SERVICE:
BRUNSWICK-TOPSHAM WATER DISTRICT
NORMAN J. CYR, SUPERINTENDENT
BOX 580
BRUNSWICK, MAINE 004011
207-729-9956

SANITARY SEWER:
BRUNSWICK SEWER DISTRICT
LEONARD BLANCHETTE
10 PINE TREE ROAD
BRUNSWICK, MAINE 04011
207-729-0148

PUBLIC WORKS DEPARTMENT:
JOHN FOSTER
9 INDUSTRY ROAD
BRUNSWICK, MAINE 04011
207-725-6654

BRUNSWICK FIRE DEPARTMENT:
CLARK LABBE, DEPUTY CHIEF
21 TOWN HALL PLACE
BRUNSWICK, MAINE 04011
207-725-5541

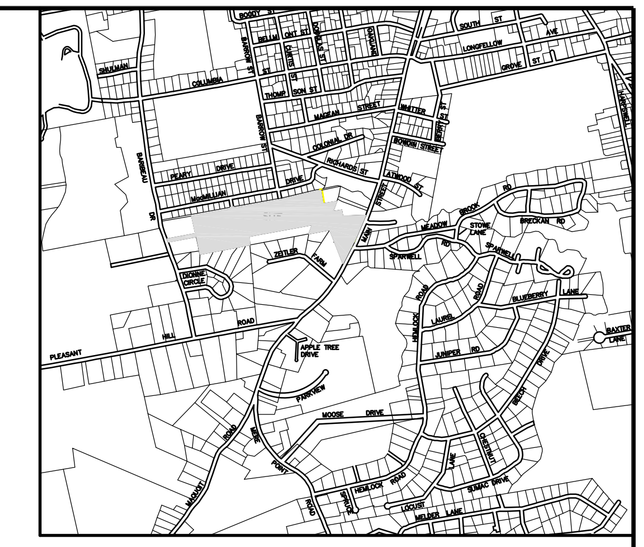

LOCATION MAP
NOT TO SCALE

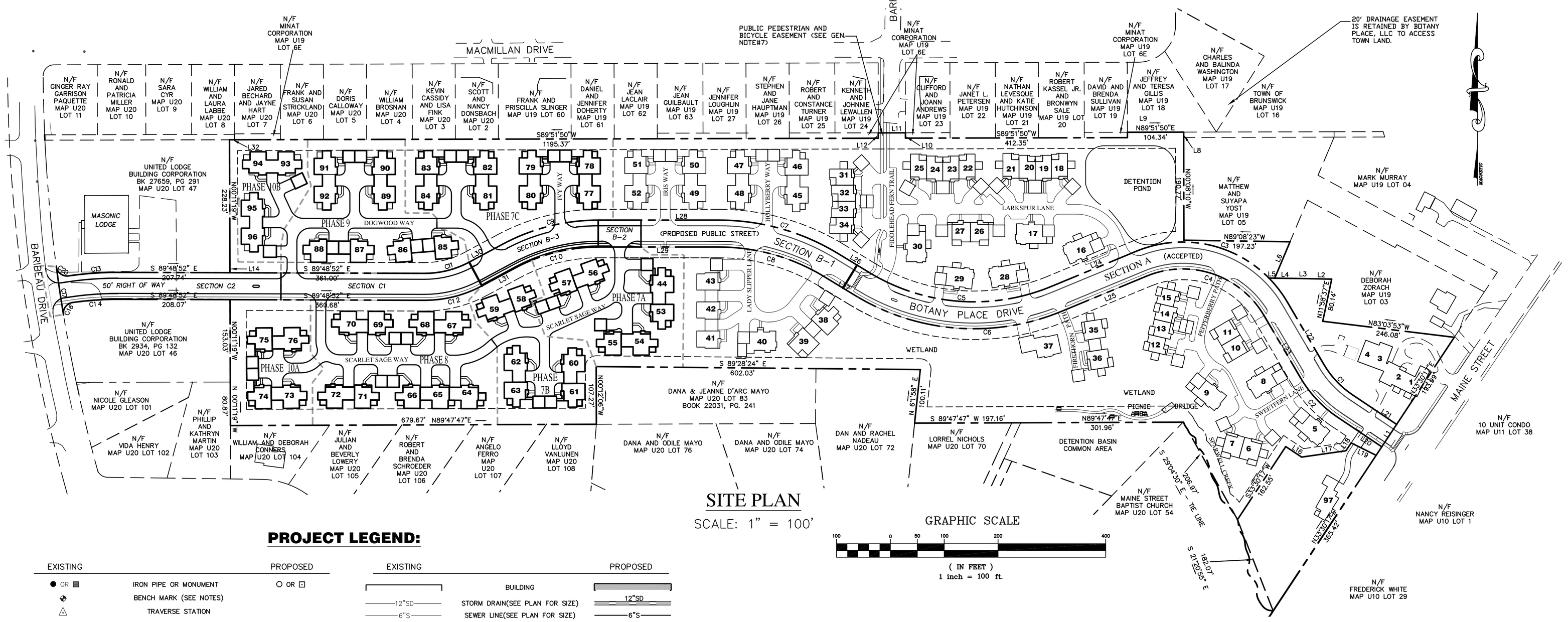

SITE PLAN

SCALE: 1" = 100'

GRAPHIC SCALE

100 0 50 100 200 400

(IN FEET)
1 inch = 100 ft.

PROJECT LEGEND:

EXISTING		PROPOSED
● OR ■	IRON PIPE OR MONUMENT	○ OR ⊡
	BENCH MARK (SEE NOTES)	
△	TRAVERSE STATION	
□	CATCH BASIN	
Ⓢ	SEWER MANHOLE	Ⓢ
	FIRE HYDRANT	
WV	WATER GATE VALVE	WV
WS	WATER SHUT-OFF	WS
○	BLOW-OFF/CLEAN-OUT	○
—○—	UTILITY POLE	—○—
	POLE W/SINGLE LIGHT	
	POLE W/DOUBLE LIGHT	
	WALL MOUNT LIGHT	
	SIGN W/DELINEATION NUMBER	1
	HANDICAP SYMBOL	
	PAVEMENT PAINT MARKINGS	
	PARKING SPACE COUNT	15
	PROPERTY LINE	
	EASEMENTS	
	SETBACK/BUFFER	
WmB Au	SOILS BOUNDARY	
	WETLAND BOUNDARY	
	STREAM	
	CULVERT	
	CURB	
	EDGE OF PAVEMENT	
	ROAD CENTERLINE	

EXISTING		PROPOSED
	BUILDING	
12"SD	STORM DRAIN(SEE PLAN FOR SIZE)	12"SD
6"S	SEWER LINE(SEE PLAN FOR SIZE)	6"S
6"FM	SEWER FORCE MAIN(SEE PLAN FOR SIZE)	6"FM
8"W	WATER LINE(SEE PLAN FOR SIZE)	8"W
G	NATURAL GAS LINE(SEE PLAN FOR SIZE)	G
UETC	UTILITIES LINE(SEE PLAN FOR SIZE)	U
x100.00	SPOT ELEVATION	x100.00
	SPOT: CURB TOP & BOTTOM	T=106.9 x B=106.4
	SLOPE ARROW	-1.5%
100	CONTOURS	100
	CLEARING LIMIT	
	TREE LINE	
	STONE WALL	
	SILT FENCE	SF SF
x x	CHAIN LINK FENCE	x x
o o	WOOD GUARD RAIL	o o
	RIPRAP	
	CONSTRUCTION ENTRANCE	
	PROPOSED PAVEMENT	
	CONCRETE	

CALL DIG SAFE UTILITY LOCATION
1-888-344-7233
STATE LAW REQUIRES ADVANCE NOTICE OF AT LEAST 3 BUSINESS DAYS BEFORE YOU DIG, GRADE OR EXCAVATE FOR THE MARKING OF UNDERGROUND UTILITIES

PROGRESS PRINT
THIS PLAN IS ISSUED FOR REVIEW AND INFORMATION PURPOSES ONLY. THIS PLAN IS SUBJECT TO CHANGE AND IS NOT FOR PRICING OR CONSTRUCTION. PRICING BASED ON THIS PLAN IS NOT BINDING UNLESS SIGNED BY BOTH CONTRACTOR AND OWNER.

STATE OF MAINE
CURTIS Y. NEUFELD
9779
Licensed
PROFESSIONAL ENGINEER

MASTER PLAN

BOTANY PLACE – RESIDENTIAL CONDOMINIUMS
BOTANY PLACE, LLC

CUMBERLAND COUNTY
P.O. BOX 811 – BRUNSWICK, MAINE

SITELINES, PA
ENGINEERS • PLANNERS • SURVEYORS
LANDSCAPE ARCHITECTS
8 CUMBERLAND STREET, BRUNSWICK, ME 04011
207.725.1200 www.sitelinespa.com

FIELD WK: BWM	SCALE: 1" = 100'	SHEET: 1
DRN BY: RPL	JOB #: 992	
CH'D BY: KPC	MAP/LOT:	
DATE: 10-26-13	FILE: 992-MASTER PLAN	

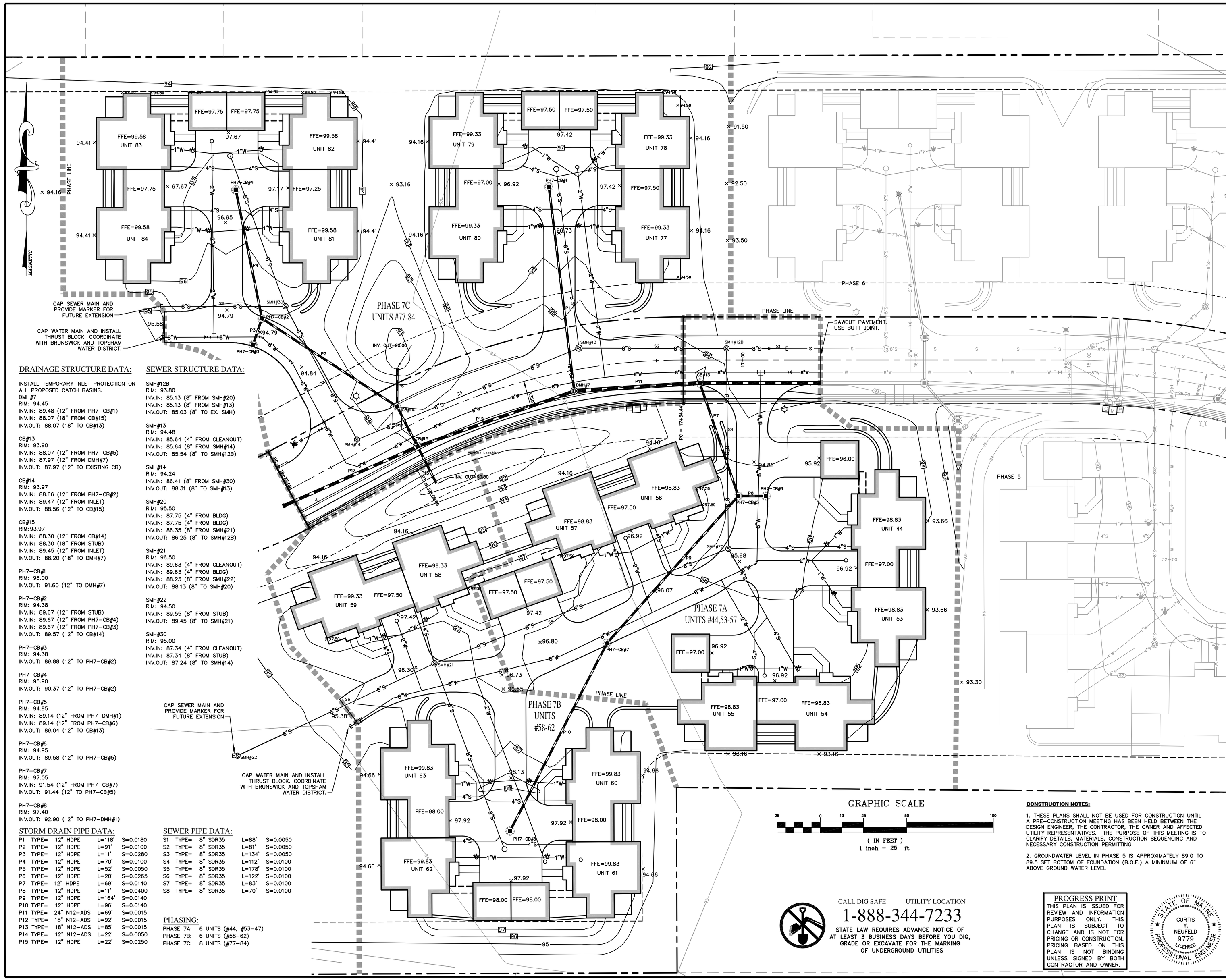

DRAINAGE STRUCTURE DATA:

INSTALL TEMPORARY INLET PROTECTION ON ALL PROPOSED CATCH BASINS.

DMH#7
RIM: 94.45
INV.IN: 89.48 (12" FROM PH7-CB#1)
INV.IN: 88.07 (18" FROM CB#15)
INV.OUT: 88.07 (18" TO CB#13)

CB#13
RIM: 93.90
INV.IN: 88.07 (12" FROM PH7-CB#5)
INV.IN: 87.97 (12" FROM DMH#7)
INV.OUT: 87.97 (12" TO EXISTING CB)

CB#14
RIM: 93.97
INV.IN: 88.66 (12" FROM PH7-CB#2)
INV.IN: 89.47 (12" FROM INLET)
INV.OUT: 88.56 (12" TO CB#15)

CB#15
RIM:93.97
INV.IN: 88.30 (12" FROM CB#14)
INV.IN: 88.30 (18" FROM STUB)
INV.IN: 89.45 (12" FROM INLET)
INV.OUT: 88.20 (18" TO DMH#7)

PH7-CB#1
RIM: 96.00
INV.OUT: 91.60 (12" TO DMH#7)

PH7-CB#2
RIM: 94.38
INV.IN: 89.67 (12" FROM STUB)
INV.IN: 89.67 (12" FROM PH7-CB#4)
INV.IN: 89.67 (12" FROM PH7-CB#3)
INV.OUT: 89.57 (12" TO CB#14)

PH7-CB#3
RIM: 94.38
INV.OUT: 89.88 (12" TO PH7-CB#2)

PH7-CB#4
RIM: 95.90
INV.OUT: 90.37 (12" TO PH7-CB#2)

PH7-CB#5
RIM: 94.95
INV.IN: 89.14 (12" FROM PH7-DMH#1)
INV.IN: 89.14 (12" FROM PH7-CB#6)
INV.OUT: 89.04 (12" TO CB#13)

PH7-CB#6
RIM: 94.95
INV.OUT: 89.58 (12" TO PH7-CB#5)

PH7-CB#7
RIM: 97.05
INV.IN: 91.54 (12" FROM PH7-CB#7)
INV.OUT: 91.44 (12" TO PH7-CB#5)

PH7-CB#8
RIM: 97.40
INV.OUT: 92.90 (12" TO PH7-DMH#1)

SEWER STRUCTURE DATA:

SMH#12B
RIM: 93.80
INV.IN: 85.13 (8" FROM SMH#20)
INV.IN: 85.13 (8" FROM SMH#13)
INV.OUT: 85.03 (8" TO EX. SMH)

SMH#13
RIM: 94.48
INV.IN: 85.64 (4" FROM CLEANOUT)
INV.IN: 85.64 (8" FROM SMH#14)
INV.OUT: 85.54 (8" TO SMH#12B)

SMH#14
RIM: 94.24
INV.IN: 86.41 (8" FROM SMH#30)
INV.OUT: 88.31 (8" TO SMH#13)

SMH#20
RIM: 95.50
INV.IN: 87.75 (4" FROM BLDG)
INV.IN: 87.75 (4" FROM BLDG)
INV.IN: 86.35 (8" FROM SMH#21)
INV.OUT: 86.25 (8" TO SMH#12B)

SMH#21
RIM: 96.50
INV.IN: 89.63 (4" FROM CLEANOUT)
INV.IN: 89.63 (4" FROM BLDG)
INV.IN: 88.23 (8" FROM SMH#22)
INV.OUT: 88.13 (8" TO SMH#20)

SMH#22
RIM: 94.50
INV.IN: 89.55 (8" FROM STUB)
INV.OUT: 89.45 (8" TO SMH#21)

SMH#30
RIM: 95.00
INV.IN: 87.34 (4" FROM CLEANOUT)
INV.IN: 87.34 (8" FROM STUB)
INV.OUT: 87.24 (8" TO SMH#14)

STORM DRAIN PIPE DATA:

P1	TYPE= 12" HDPE	L=118'	S=0.0180
P2	TYPE= 12" HDPE	L=91'	S=0.0100
P3	TYPE= 12" HDPE	L=11'	S=0.0280
P4	TYPE= 12" HDPE	L=70'	S=0.0100
P5	TYPE= 12" HDPE	L=52'	S=0.0050
P6	TYPE= 12" HDPE	L=20'	S=0.0265
P7	TYPE= 12" HDPE	L=69'	S=0.0140
P8	TYPE= 12" HDPE	L=11'	S=0.0400
P9	TYPE= 12" HDPE	L=164'	S=0.0140
P10	TYPE= 12" HDPE	L=96'	S=0.0140
P11	TYPE= 24" N12-ADS	L=69'	S=0.0015
P12	TYPE= 18" N12-ADS	L=92'	S=0.0015
P13	TYPE= 18" N12-ADS	L=85'	S=0.0015
P14	TYPE= 12" N12-ADS	L=22'	S=0.0050
P15	TYPE= 12" HDPE	L=22'	S=0.0250

SEWER PIPE DATA:

S1	TYPE= 8" SDR35	L=88'	S=0.0050
S2	TYPE= 8" SDR35	L=81'	S=0.0050
S3	TYPE= 8" SDR35	L=134'	S=0.0050
S4	TYPE= 8" SDR35	L=112'	S=0.0100
S5	TYPE= 8" SDR35	L=178'	S=0.0100
S6	TYPE= 8" SDR35	L=122'	S=0.0100
S7	TYPE= 8" SDR35	L=83'	S=0.0100
S8	TYPE= 8" SDR35	L=70'	S=0.0100

PHASING:

PHASE 7A: 6 UNITS (#44, #53-47)
PHASE 7B: 6 UNITS (#58-62)
PHASE 7C: 8 UNITS (#77-84)

GRAPHIC SCALE

25 0 13 25 50 100

(IN FEET)
1 inch = 25 ft.

CONSTRUCTION NOTES:

1. THESE PLANS SHALL NOT BE USED FOR CONSTRUCTION UNTIL A PRE-CONSTRUCTION MEETING HAS BEEN HELD BETWEEN THE DESIGN ENGINEER, THE CONTRACTOR, THE OWNER AND AFFECTED UTILITY REPRESENTATIVES. THE PURPOSE OF THIS MEETING IS TO CLARIFY DETAILS, MATERIALS, CONSTRUCTION SEQUENCING AND NECESSARY CONSTRUCTION PERMITTING.

2. GROUNDWATER LEVEL IN PHASE 5 IS APPROXIMATELY 89.0 TO 89.5 SET BOTTOM OF FOUNDATION (B.O.F.) A MININMUM OF 6" ABOVE GROUND WATER LEVEL

CALL DIG SAFE UTILITY LOCATION
1-888-344-7233
STATE LAW REQUIRES ADVANCE NOTICE OF AT LEAST 3 BUSINESS DAYS BEFORE YOU DIG, GRADE OR EXCAVATE FOR THE MARKING OF UNDERGROUND UTILITIES

PROGRESS PRINT
THIS PLAN IS ISSUED FOR REVIEW AND INFORMATION PURPOSES ONLY. THIS PLAN IS SUBJECT TO CHANGE AND IS NOT FOR PRICING OR CONSTRUCTION. PRICING BASED ON THIS PLAN IS NOT BINDING UNLESS SIGNED BY BOTH CONTRACTOR AND OWNER.

STATE OF MAINE
CURTIS Y. NEUFELD
9779
LICENSED
PROFESSIONAL ENGINEER

GRADING AND DRAINAGE NOTES:

1. THE CONTRACTOR SHALL PHASE GRADING EFFORTS SUCH THAT TOTAL SITE DISTURBANCE IS MINIMIZED. TEMPORARY EROSION CONTROL MEASURES SHALL BE INSTALLED PRIOR TO GRADING EFFORTS OR WITHOUT DELAY UPON THEIR COMPLETION, DEPENDENT UPON THE SITUATION.

2. ALL FILL SLOPES SHALL BE A MINIMUM OF 3:1 HORIZONTAL TO VERTICAL UNLESS OTHERWISE NOTED OR DIRECTED.

3. THE LIMITS OF DISTURBANCE SHALL GENERALLY BE THE MINIMAL EXTENT NECESSARY ONLY TO PERFORM THE GRADING EFFORTS SHOWN ON THE DRAWINGS. SPECIAL CARE SHALL BE TAKEN TO AVOID DISTURBANCE OF OBJECTS AND AREAS NOT SPECIFICALLY IDENTIFIED FOR MODIFICATION OR REMOVAL.

4. ALL DISTURBED AREAS SHALL BE LOAMED AND SEEDED IN ACCORDANCE WITH THE DRAWINGS, UNLESS INTENDED FOR OTHER SURFACE COVER.

5. STORM DRAINS SHALL BE CONSTRUCTED CONCURRENTLY WITH GRADING EFFORTS TO PROVIDE ADEQUATE CONVEYANCE FOR ANY SITE RUNOFF CONDITIONS.

6. WHERE FINAL GRADING HAS BEEN COMPLETED, SURFACE RESTORATION FOR DISTURBED AREAS WILL BE COMPLETED AS SOON AS PRACTICABLE. FOR VEGETATIVE AREAS, VEGETATION WILL BE PROGRESSIVELY ESTABLISHED.

7. UNLESS OTHERWISE NOTED, ALL STORM DRAIN PIPE SHALL BE IN ACCORDANCE WITH MDOT SPECIFICATIONS SECTION 603. PIPE CULVERTS AND STORM DRAINS, LATEST REVISION WITH ACCEPTABLE TYPES OF PIPE ARE AS FOLLOWS:
SMOOTH BORE POLYETHYLENE PIPE – HDPE N-12 ADS

8. BENCHMARK INFORMATION: SEE PLAN

9. THE CONTRACTOR SHALL SUBMIT SHOP DRAWINGS OF ALL DRAINAGE STRUCTURES AND PIPING PRIOR TO ORDERING.

10. RIM ELEVATIONS OF PROPOSED DRAINAGE STRUCTURES ARE APPROXIMATE. FINAL ELEVATIONS ARE TO BE SET FLUSH AND CONSISTENT WITH THE GRADING PLANS.

11. CONTRACTOR TO SUBMIT SHOP DRAWINGS OF RETAINING WALL TO ENGINEER PRIOR TO ORDERING MATERIALS. (SITELINES P.A., 8 CUMBERLAND STREET, BRUNSWICK, MAINE 04011, 207-725-1200)

LAYOUT NOTES:

1. ALL DIMENSIONING, UNLESS NOTED OTHERWISE, IS TO THE FACE OF CURB AND/OR FOUNDATION

2. OFFSETS TO CATCH BASINS AND MANHOLES ARE TO THE CENTER OF THE FRAME.

3. PIPE LENGTH EQUALS THE CENTER TO CENTER DISTANCES BETWEEN CATCH BASINS AND/OR MANHOLES MINUS ONE HALF THE DIAMETER OF EACH CATCH BASIN OR MANHOLE.

4. BOUNDARY INFORMATION ON LAYOUT PLAN IS FOR REFERENCE ONLY, REFER TO CERTIFIED BOUNDARY PLANS FOR BOUNDARY INFORMATION.

UTILITY NOTES:

1. ALL TERMINATIONS AND CONNECTIONS OF SERVICES SHALL BE IN COMPLIANCE WITH REQUIREMENTS OF THE APPLICABLE UTILITY DISTRICT. ALL BACKFILLING AND COMPACTION OF WATER AND SEWER LINE TRENCHES SHALL BE AS APPROVED BY THE BRUNSWICK AND TOPSHAM WATER DISTRICT AND BRUNSWICK SEWER DISTRICT, RESPECTIVELY.

2. THE CONTRACTOR SHALL CONTACT DIGSAFE (888-344-7233) PRIOR TO COMMENCING EXCAVATION.

3. THE BASIS FOR PROJECT LAYOUT AND FOR CONSTRUCTION ELEVATIONS IS THE BASELINE AND BENCHMARK EXISTING ON THE SITE AND SHOWN ON THE DRAWINGS.

4. THE CONTRACTOR SHALL CONFIRM HORIZONTAL AND VERTICAL CONTROL BEFORE BEGINNING WORK.

5. SEE PLUMBING AND ELECTRICAL PLANS FOR LOCATION AND INVERTS OF SLEEVES IN FOUNDATIONS.

6. ELECTRIC SERVICE SHALL BE INSTALLED IN CONDUIT UNDER PAVEMENT AND CONCRETE.

7. CONTRACTOR SHALL SUBMIT SHOP DRAWINGS OF ALL SEWER, WATER, ELECTRICAL, AND SANITARY CONDUIT, MANHOLES, TRANSFORMERS, AND FITTINGS FOR APPROVAL.

8. CONTRACTOR SHALL VERIFY LOCATION OF EXISTING UTILITIES PRIOR TO CONSTRUCTION.

9. DUCTILE IRON PIPE SHALL MEET THE REQUIREMENTS OF AWWA C150 AND C151, CLASS 52, AND HAVE PUSH ON OR FLANGED JOINTS AS REQUIRED. FITTINGS SHALL HAVE MECHANICAL JOINTS WITH RETAINER GLANDS.

10. SANITARY SEWER PIPE AND FITTINGS SHALL BE SDR-35 PVC.

11. INSTALL 2" RIGID STYROFOAM INSULATION OVER SANITARY SEWER IN AREAS WHERE THERE IS LESS THAN 4' OF COVER.

12. CONNECTIONS AT MANHOLES/CATCH BASINS SHALL HAVE A FLEXIBLE BOOT CAST ONTO THE BARREL AND SECURED WITH STAINLESS STEEL BANDS.

13. BUILDING FOOTPRINT SHOWN IS NOT FOR FOUNDATION LAYOUT. REFER TO STRUCTURAL/ARCHITECTURAL DRAWINGS.

3.	01-21-14	REVISED PHASE LINES	RPL
2.	01-17-14	RAISED GRADES	CYN
1.	11-20-13	ISSUED FOR REVIEW	CYN

SITE PLAN - PHASE 7

BOTANY PLACE – RESIDENTIAL CONDOMINIUMS
BOTANY PLACE, LLC

CUMBERLAND COUNTY
P.O. BOX 811 – BRUNSWICK, MAINE

SITELINES, PA
ENGINEERS • PLANNERS • SURVEYORS
LANDSCAPE ARCHITECTS
8 CUMBERLAND STREET, BRUNSWICK, ME 04011
207.725.1200 www.sitelinespa.com

FIELD WK: BWM	SCALE: 1"=25'	SHEET: 2
DRN BY: JJM	JOB #: 992	
CH'D BY: CYN	MAP/LOT:	
DATE: 11-20-13	FILE: 992-PHASE-7-SITE-PLAN	

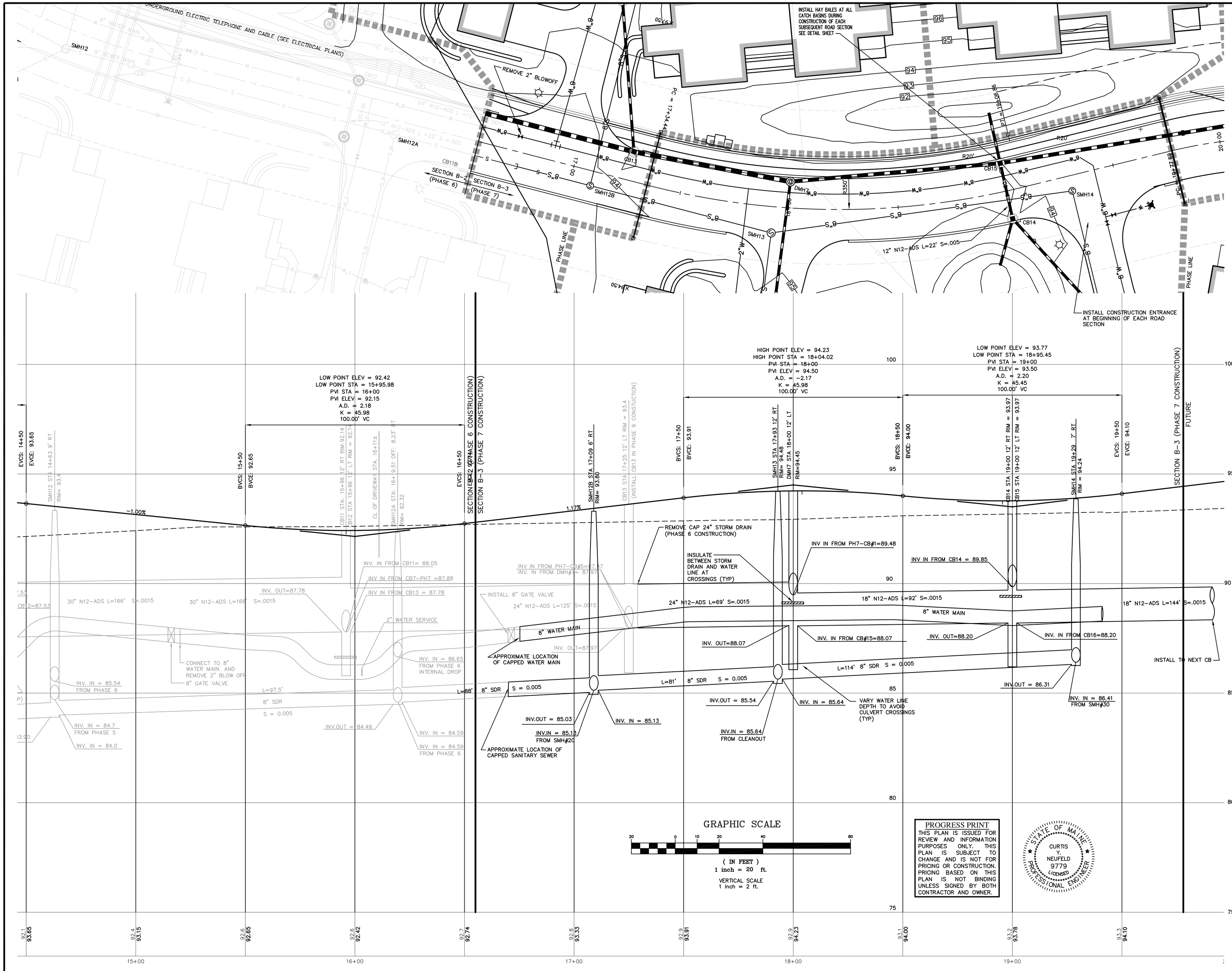

PROGRESS PRINT

THIS PLAN IS ISSUED FOR REVIEW AND INFORMATION PURPOSES ONLY. THIS PLAN IS SUBJECT TO CHANGE AND IS NOT FOR PRICING OR CONSTRUCTION. PRICING BASED ON THIS PLAN IS NOT BINDING UNLESS SIGNED BY BOTH CONTRACTOR AND OWNER.

STATE OF MAINE — CURTIS Y. NEUFELD — 9779 — LICENSED — PROFESSIONAL ENGINEER

5.	01-21-14	UPDATED DESIGN	RPL
4.	11-20-13	ISSUED FOR REVIEW	JJM
3.	11-09-04	REVISED STORM DRAIN PIPES FROM SDR35 TO N12-ADS	REH
2.	08-09-04	ADDED EROSION CONTROL MEASURES, REVISED CB INVERTS SUBMITTED TO MDEP FOR REVIEW AND APPROVAL	REH
1.	08-03-04	REVISED FINISH CL GRADES, DRAINAGE AND UTILITIES SUBMITTED TO MDEP FOR REVIEW AND APPROVAL	REH

PLAN AND PROFILE
STA 14+50 TO 20+00

BOTANY PLACE – RESIDENTIAL CONDOMINIUMS
BOTANY PLACE, LLC

CUMBERLAND COUNTY
P.O. BOX 811 – BRUNSWICK, MAINE

SITELINES P.A.
ENGINEERS ■ PLANNERS ■ SURVEYORS
8 CUMBERLAND STREET, BRUNSWICK, ME 04011
(207) 725-1200 FAX 725-1114 EMAIL: siteline@blazenetme.net

FIELD WK: DIRIGO	SCALE: 1"=20'	SHEET: 3
DRN BY: JJM	JOB #: 992	
CH'D BY: CYN	SS:	
DATE: 03-23-04	FILE: 992profile	

GENERAL NOTES:

1. TOPOGRAPHIC DATA FOR THE PRE–DEVELOPMENT AND POST–DEVELOPMENT STORMWATER PLANS IS BASED ON GROUND SURVEY PERFORMED BY DIRIGO LAND SERVICES, INC. TOPOGRAPHIC DATA FOR THE DESIGN DRAWINGS AND BOUNDARY INFORMATION IS BASED ON GROUND SURVEY PERFORMED BY DIRIGO LAND SERVICES, INC.

2. WETLANDS SHOWN ON THESE PLANS WERE DELINEATED BY WOODLOT ALTERNATIVES, INC. OF TOPSHAM, MAINE.

3. THE CONTRACTOR IS SPECIFICALLY CAUTIONED THAT THE LOCATION AND/OR THE ELEVATION OF THE EXISTING UTILITIES AS SHOWN ON THESE PLANS IS BASED ON RECORDS OF THE VARIOUS UTILITY COMPANIES AND WHERE POSSIBLE MEASUREMENTS TAKEN IN THE FIELD. THIS INFORMATION HAS NOT BEEN INDEPENDENTLY VERIFIED BY THE OWNER OR ITS REPRESENTATIVES AND IS NOT TO BE RELIED ON AS BEING EXACT OR COMPLETE. THE CONTRACTOR SHALL CALL THE APPROPRIATE UTILITY COMPANY AND DIG SAFE (1–800–DIG–SAFE) AT LEAST 72 HOURS PRIOR TO ANY EXCAVATION TO REQUEST EXACT FIELD LOCATION OF UTILITIES. IT SHALL BE THE RESPONSIBILITY OF THE CONTRACTOR TO RELOCATE ALL EXISTING UTILITIES WHICH CONFLICT WITH THE PROPOSED IMPROVEMENTS SHOWN ON THE PLANS. TEST PITS SHALL BE EXCAVATED AT ALL CROSSINGS TO VERIFY DEPTHS AND SIZE PRIOR TO COMMENCEMENT OF UTILITY WORK.

4. RIM ELEVATIONS OF PROPOSED DRAINAGE AND SANITARY SEWER MANHOLES AND ASSOCIATED STRUCTURES ARE APPROXIMATE. FINAL ELEVATIONS ARE TO BE SET FLUSH AND CONSISTENT WITH THE GRADING PLANS. ADJUST ALL OTHER RIM ELEVATIONS OF MANHOLES, WATER GATES, GAS GATES AND OTHER UTILITIES TO FINISH GRADE WITHIN LIMITS OF WORK.

5. THE LOCATION, SIZE, DEPTH, AND SPECIFICATIONS FOR CONSTRUCTION OF PROPOSED PRIVATE UTILITY SERVICES SHALL BE INSTALLED ACCORDING TO THE REQUIREMENTS PROVIDED BY, AND APPROVED BY THE RESPECTIVE UTILITY COMPANY (GAS, TELEPHONE, ELECTRIC AND FIRE ALARM). FINAL DESIGN LOADS AND LOCATIONS TO BE COORDINATED WITH OWNER AND ARCHITECT.

6. THE CONTRACTOR SHALL FIELD VERIFY THE LOCATION, SIZE, INVERTS AND TYPES OF EXISTING PIPES AT ALL PROPOSED POINTS OF CONNECTION PRIOR TO ORDERING MATERIALS. WHERE AN EXISTING UTILITY IS FOUND TO CONFLICT WITH THE PROPOSED WORK, THE LOCATIONS, ELEVATION, AND SIZE OF THE UTILITY SHALL BE ACCURATELY DETERMINED WITHOUT DELAY BY THE CONTRACTOR, AND THE INFORMATION FURNISHED IN WRITING TO THE OWNER'S REPRESENTATIVE FOR THE RESOLUTION OF THE CONFLICT.

7. CONTRACTOR SHALL VERIFY ALL CRITICAL DIMENSIONS AND GRADES TO HIS SATISFACTION BEFORE WORK BEGINS. CONTRACTOR SHALL CONFIRM LOCATION AND DEPTH ALL UTILITY LINE CROSSINGS WITH TEST PITS PRIOR TO BEGINNING WORK. CONFLICTS SHALL BE REPORTED IN WRITING TO ENGINEER FOR RESOLUTION OF THE CONFLICT.

8. ALL AREAS OUTSIDE THE LIMIT OF WORK THAT ARE DISTURBED SHALL BE RESTORED BY THE CONTRACTOR TO THEIR ORIGINAL CONDITION AT THE CONTRACTOR'S EXPENSE. ALL AREAS DISTURBED DURING CONSTRUCTION NOT COVERED WITH BUILDINGS, STRUCTURES, OR PAVEMENT SHALL RECEIVE 6 INCHES OF LOAM AND SEED.

9. CONTRACTOR SHALL MAKE ALL ARRANGEMENTS AND SHALL BE RESPONSIBLE FOR PAYING ANY FEES FOR ANY POLE RELOCATION AND FOR THE ALTERATION OR ADJUSTMENT OF GAS, ELECTRIC, TELEPHONE, FIRE ALARM AND ANY OTHER PRIVATE UTILITIES BY THE UTILITY COMPANIES.

10. UPON AWARD OF CONTRACT, CONTRACTOR SHALL MAKE ALL NECESSARY CONSTRUCTION NOTIFICATIONS AND APPLY FOR AND OBTAIN ALL NECESSARY PERMITS, PAY ALL FEES AND POST ALL BONDS ASSOCIATED WITH THE WORK INDICATED ON THE DRAWINGS.

12. ALL PROPERTY MONUMENTATION DISTURBED DURING CONSTRUCTION SHALL BE RESET TO THEIR ORIGINAL LOCATION BY A MAINE REGISTERED PROFESSIONAL LAND SURVEYOR (PLS) AT THE CONTRACTOR'S EXPENSE. THE CONTRACTOR SHALL PREPARE AN AS–BUILT PLAN SURVEY SHOWING LOCATIONS OF ALL SURFACE FEATURES AND SUBSURFACE UTILITY SYSTEMS INCLUDING THE LOCATION TYPE, SIZE AND INVERTS.

13. CONTRACTOR SHALL INSTALL ALL EROSION CONTROL MEASURES PRIOR TO EARTHWORK OPERATION AND MAINTAIN ALL EROSION CONTROL MEASURES AND SEEDED EMBANKMENTS DURING CONSTRUCTION. EROSION CONTROL SHALL BE REMOVED ONLY UPON THE ESTABLISHMENT OF ALL LANDSCAPED AREAS. AL WORK SHALL BE IN COMPLIANCE WITH THE ENVIRONMENTAL QUALITY HANDBOOK FOR EROSION AND SEDIMENT CONTROL, LATEST EDITION, AS ADOPTED BY THE MAINE DEPARTMENT OF ENVIRONMENTAL PROTECTION.

14. CONTRACTOR SHALL BE SOLELY RESPONSIBLE FOR SITE SECURITY AND JOB SAFETY. ALL CONSTRUCTION ACTIVITY SHALL BE IN ACCORDANCE WITH OSHA STANDARDS AND LOCAL REQUIREMENTS.

15. ALL MATERIALS AND CONSTRUCTION METHODS USED WITHIN THE PUBLIC RIGHT–OF–WAY SHALL CONFORM TO ALL LOCAL MUNICIPAL STANDARDS AND MAINE DEPARTMENT OF TRANSPORTATION SPECIFICATIONS.

16. THE CONTRACTOR IS REQUIRED TO CONTROL DUST DURING CONSTRUCTION. EXPOSED SOIL AREAS SHALL BE SPRAYED WITH WATER AS NEEDED TO CONTROL DUST EMISSIONS. COVER EXPOSED SOIL AREAS AS QUICKLY AS PRACTICAL TO PREVENT WINDS FROM GENERATING DUST.

17. MONITOR WELL SHALL BE REMOVED PRIOR TO CONSTRUCTION. MONITOR WELL SHALL BE FILLED WITH BENTONITE GROUT, NEAT CEMENT, OR EQUIVALENT. THE CONTRACTOR SHALL INJECT CONCRETE INTO THE WELL BY MEANS OF A PIPE THAT IS GRADUALLY WITHDRAWN AS THE WELL FILLS, IN ORDER TO AVOID FORMATION OF VOID SPACES WITH THE FILL. ONCE THE WELL IS FILLED, THE CASING MAY BE PULLED OR CUT OFF BELOW GRADE.

LAYOUT NOTES:

1. ALL DIMENSIONING, UNLESS NOTED OTHERWISE, IS TO THE FACE OF CURB OR BUILDING.

2. OFFSETS TO CATCH BASINS AND MANHOLES ARE TO THE CENTER OF THE FRAME.

3. PIPE LENGTH EQUALS THE CENTER TO CENTER DISTANCES BETWEEN CATCH BASINS AND/OR MANHOLES MINUS ONE HALF THE DIAMETER OF EACH CATCH BASIN OR MANHOLE.

4. BOUNDARY INFORMATION ON LAYOUT PLAN IS FOR REFERENCE ONLY, REFER TO CERTIFIED BOUNDARY PLANS FOR BOUNDARY INFORMATION.

GRADING AND DRAINAGE NOTES:

1. UNLESS OTHERWISE NOTED, ALL STORM DRAIN PIPE SHALL BE IN ACCORDANCE WITH MDOT SPECIFICATIONS SECTION 603. PIPE CULVERTS AND STORM DRAINS, LATEST REVISION WITH THE EXCEPTION THAT THE ONLY ACCEPTABLE TYPES OF PIPE ARE AS FOLLOWS:
   - REINFORCED CONCRETE PIPE
   - POLYVINYL CHLORIDE PIPE (PVC)
   - SMOOTH BORE POLYETHYLENE PIPE – HDPE N–12 ADS OR SDR 35

2. TOPSOIL STRIPPED IN AREAS OF CONSTRUCTION THAT IS SUITABLE FOR REUSE AS LOAM SHALL BE STOCKPILED ON SITE AT A LOCATION TO BE DESIGNATED BY OWNER. UNSUITABLE SOIL SHALL BE SEPARATED, REMOVED AND DISPOSED OF AT AN APPROVED DISPOSAL LOCATION OFF SITE.

3. THE CONTRACTOR SHALL ANTICIPATE THAT GROUNDWATER WILL BE ENCOUNTERED DURING CONSTRUCTION AND SHALL INCLUDE SUFFICIENT COSTS WITHIN THEIR BID TO PROVIDE DEWATERING AS NECESSARY. NO SEPARATE PAYMENT SHALL BE MADE TO THE CONTRACTOR FOR DEWATERING. AREAS TO BE DEWATERED SHALL NOT BE ALLOWED TO DISCHARGE DIRECTLY TO THE RESOURCE WITHOUT PROVIDING PRE–TREATMENT. TEMPORARY SEDIMENT BASINS, BUFFERS OR FILTERING BAGS CAN BE USED.

SEWER CONSTRUCTION NOTES:

1. SEWER LINE CONSTRUCTION SHALL BE CONSTRUCTED IN ACCORDANCE WITH THE BRUNSWICK SEWER DISTRICT STANDARD SPECIFICATIONS. CONTACT THE DISTRICT TO SCHEDULE APPROPRIATE INSPECTIONS AS MAY BE REQUIRED FOR MAIN EXTENSIONS.

2. MINIMUM DIAMETER FOR MAINLINE SEWER IS EIGHT INCH (8") WITH A MINIMUM SLOPE OF 0.005.

3. SANITARY SEWER SERVICE STUBS TO BE SIX INCH (6") DIAMETER MINIMUM AND TO BE INSTALLED BEYOND THE EDGE OF PAVEMENT, ADJACENT SIDEWALK AND UTILITY TRENCH AS SHOWN ON PLAN.

4. SANITARY SEWER SERVICE STUBS TO BE CONNECTED TO THE MAIN LINE BY USE OF 8X8X6 WYES. TEE STUBS WILL NOT BE ALLOWED.

5. SANITARY SEWER MANHOLES TO BE PER ASTM SPECIFICATIONS, WITH TWO (2) COATS OF BITUMINOUS COATING, WITH SMOOTH CHANNELED INVERTS, AND PROPERLY SIZED AND ORIENTED PRECAST PIPE OPENINGS WITH FLEXIBLE PIPE BOOTS. STEPS TO BE INSTALLED PARALLEL TO INVERT CHANNEL. SERVICE CONNECTIONS TO BE INCORPORATED IN INVERT CHANNEL.

6. MANHOLE FRAMES AND COVERS TO BE SUITABLE FOR HIGHWAY LOADING AND TO BE TO DISTRICT STANDARDS.

7. DESIGN AND CONSTRUCTION OF PROJECT SANITARY SEWER UTILITY WILL BE CARRIED OUT TO SPECIFICALLY EXCLUDE THE INTRODUCTION OF NON–SANITARY GROUND AND / OR SURFACE WATER INTO THE SANITARY SEWER SYSTEM.

8. ALL GRAVITY SEWER TO BE LOW PRESSURE AIR AND DEFLECTION TESTED AFTER BACK FILLING AND COMPACTION AND PRIOR TO CONNECTION OF BUILDING SEWER.

9. PRIOR TO THE START OF CONSTRUCTION, DEVELOPER TO PROVIDE TO DISTRICT TWO (2) COPIES OF UTILITY PLAN.

10. MINIMUM HORIZONTAL CLEARANCES TO BE MAINTAINED BETWEEN UTILITIES, TO PERMIT FUTURE MAINTENANCE OPERATIONS WITHOUT DISTURBING ADJACENT UTILITIES,

11. SANITARY SEWER PIPE SHALL BE POLYVINYL CHLORIDE PIPE MEETING THE REQUIREMENTS OF SDR–35 FOR GRAVITY PIPE AND SDR–18 FOR PRESSURE PIPE, UNLESS OTHERWISE NOTED ON THE PLANS. ALL SEWER UTILITY MATERIALS AND INSTALLATION METHODS SHALL CONFORM TO THE BRUNSWICK SEWER DISTRICT.

12. 2' X 24" RIGID INSULATION SHALL BE INSTALLED OVER THE SEWER PIPING WHEN THERE IS LESS THAN 4' OF COVER

WATER CONSTRUCTION NOTES:

1. ALL WATER UTILITY MATERIALS AND INSTALLATION METHODS SHALL CONFORM TO BRUNSWICK AND TOPSHAM WATER DISTRICT STANDARDS. ALL WATER DISTRIBUTION PIPING SHALL BE CLASS 52 DUCTILE IRON PIPE. DISINFECTION OF WATER LINES SHALL CONFORM TO AWWA STANDARD C651, LATEST REVISION.

2. TEST PITS SHALL BE EXCAVATED AT CROSSINGS OF UTILITIES TO DETERMINE LOCATION AND DEPTH SUFFICIENTLY IN ADVANCE OF WATER MAIN CONSTRUCTION TO PERMIT ADJUSTMENT OF WATER MAIN LOCATION BY DEFLECTION OF THE PIPE.

3. MINIMUM DEPTH OF COVER FOR ALL WATER LINES SHALL BE 5'–0" FROM FINISHED GRADE UNLESS OTHERWISE DIRECTED.

4. PROPOSED PIPELINE, VALVE, AND HYDRANT LOCATIONS ARE APPROXIMATE. FINAL LOCATION MAY BE ADJUSTED AS REQUIRED TO AVOID CONFLICTS WITH OTHER UTILITIES AND STRUCTURES. NO ADDITIONAL PAYMENT WILL BE MADE FOR EXCAVATION AND BACK FILL BEYOND THE TRENCH LIMITS SHOWN.

5. ANY EXISTING PIPELINE, UTILITY OR STRUCTURE, INCLUDING EXISTING WATER MAINS, DAMAGED BY CONTRACTOR'S OPERATIONS SHALL BE IMMEDIATELY REPAIRED BY CONTRACTOR AT NO ADDITIONAL COST TO OWNER.

6. ALL PROPERTY REMOVED, DAMAGED OR ALTERED IN THE COURSE OF THE WORK SHALL BE REPLACED OR RESTORED TO EQUAL OR BETTER CONDITION TO THAT WHICH EXISTED BEFORE THE WORK COMMENCED.

7. ALL FITTINGS, VALVES, AND HYDRANTS SHALL HAVE MECHANICAL JOINTS RESTRAINED WITH GRIP–RING RETAINER GLANDS.

8. THE WATER DISTRICT SHALL FURNISH (AT COST) ALL MATERIALS FOR THE PROJECT INCLUDING PIPE, COUPLINGS, VALVES, FITTINGS, HYDRANTS, TAPPING SLEEVES AND VALVES, VALVE BOXES, CORPORATION STOPS, CURB STOPS, SERVICE PIPING, CURB BOXES, RETAINER GLANDS, AND ACCESSORIES SUCH AS GASKETS, BOLTS, NUTS, AND GLANDS AS REQUIRED TO MAKE THE PIPING SYSTEMS COMPLETE. ALL CONCRETE AND EARTH MATERIALS INCLUDING CRUSHED STONE, GRAVEL, SAND, AND BORROW SHALL BE FURNISHED BY THE CONTRACTOR.

9. A SEPARATION OF 12" VERTICAL CLEARANCE MUST BE MAINTAINED BETWEEN THE WATER MAIN AND ALL OTHER UTILITIES.

10. ALL WATER MAIN SIZES ARE AS INDICATED ON THE PLAN/PROFILES. EACH UNIT SHALL BE SERVICED BY A 4" LINE OFF THE MAIN, SPLIT AT THE UNIT TO PROVIDE A 1" DOMESTIC SUPPLY INSTALLED IN ACCORDANCE WITH THE STANDARDS OF THE BRUNSWICK AND TOPSHAM WATER DISTRICT.

11. THE COMPLETE PIPING SYSTEM SHALL BE FLUSHED, CHLORINATED, AND PRESSURE TESTED BY THE CONTRACTOR PRIOR TO ACCEPTANCE BY THE OWNER. SERVICES SHALL BE INSTALLED UNDER LINE PRESSURE AFTER THE MAIN HAS BEEN SUCCESSFULLY PRESSURE TESTED.

12. THRUST BLOCKS OR LOCKING RETAINER GLANDS SHALL BE PLACED ON THE WATER DISTRIBUTION LINES AND FORCE MAIN AT ALL BENDS, TEES, VALVES, CHANGES IN DIRECTION, ETC. THE THRUST BLOCK OR LOCKING RETAINER GLANDS SHALL MEET THE REQUIREMENTS OF THE BRUNSWICK AND TOPSHAM WATER DISTRICT.

ELECTRIC NOTES:

1. CONDUIT & WIRING TO BE THE RESPONSIBILITY OF THE ELECTRICAL CONTRACTOR. EXCAVATION, TRENCHING AND BACKFILLING TO BE COMPLETED BY THE SITE CONTRACTOR.

2. THE CONTRACTOR SHALL EXCAVATE, PLACE, AND BACKFILL EACH CONCRETE LIGHT POST. TRENCH @ 2' – 6" DEEP AS REQUIRED FOR POWER TO ALL POLES.

PRE-CONSTRUCTION SAFETY

CALL DIG–SAFE, TOLL FREE, AT 1–888–DIGSAFE, AT LEAST THREE BUSINESS DAYS, BUT NO MORE THAN 30 CALENDAR DAYS BEFORE CONSTRUCTION. AT THAT TIME BE READY WITH ALL IMPORTANT INFORMATION SUCH AS CITY/TOWN, STREET/ROAD LOCATION DESCRIPTION, EXTENT AND TYPE OF WORK, CONTACT PERSON W/ PHONE NUMBER, AND THE CONTRACTORS NAME W/ PHONE NUMBER. IF BLASTING IS NEEDED CONTACT DIG–SAFE AT LEAST ONE BUSINESS DAY IN ADVANCE. THE CONTRACTOR SHALL PRE–MARK THE BOUNDARIES OF THE PLANNED EXCAVATION WITH WHITE PAINT, FLAGS OR STAKES, SO UTILITY CREWS KNOW WHERE TO MARK THEIR LINES. WAIT THREE BUSINESS DAYS FOR LINES TO BE LOCATED AND MARKED WITHIN 3 DAYS WITH COLOR–CODED PAINTS STAKES OR FLAGS.

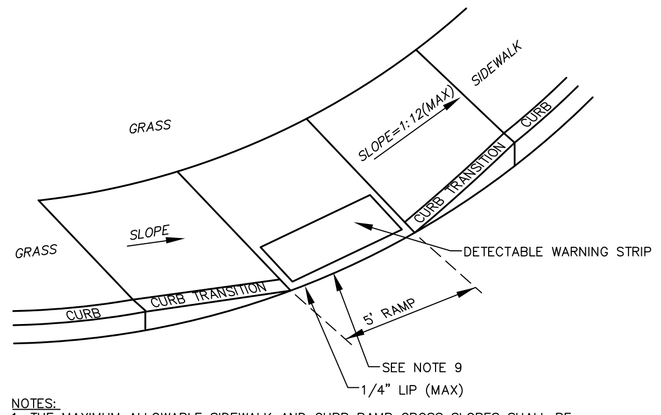

NOTES:
1. THE MAXIMUM ALLOWABLE SIDEWALK AND CURB RAMP CROSS SLOPES SHALL BE 1.5% (1% MIN).
2. THE MAXIMUM ALLOWABLE SLOPE OF ACCESSIBLE ROUTE EXCLUDING CURB RAMPS SHALL BE 5%
3. THE MAXIMUM ALLOWABLE SLOPE OF ACCESSIBLE ROUTE CURB RAMPS SHALL BE 7.5%.
4. A MINIMUM OF 3 FEET CLEAR SHALL BE MAINTAINED AT ANY PERMANENT OBSTACLE IN ACCESSIBLE ROUTE (I.E., HYDRANTS, UTILITY POLES, TREE WELLS, SIGNS, ETC.)
5. CURB TREATMENT VARIES, SEE PLANS FOR CURB TYPE.
6. BASE OF RAMP SHALL BE GRADED TO PREVENT PONDING.
7. SEE TYPICAL SIDEWALK SECTION FOR RAMP CONSTRUCTION.
8. WHERE ACCESSIBLE ROUTES ARE LESS THAN 5' IN WIDTH (EXCLUDING CURBING) A 5'x5' PASSING AREA SHALL BE PROVIDED AT INTERVALS NOT TO EXCEED 200 FEET.
9. ELIMINATE ALL CURBING AT RAMP (OTHER THAN VERTICAL CURBING, WHICH SHALL BE SET FLUSH) WHERE IT ABUTS ROADWAY.

TIP DOWN SIDEWALK RAMP
NOT TO SCALE

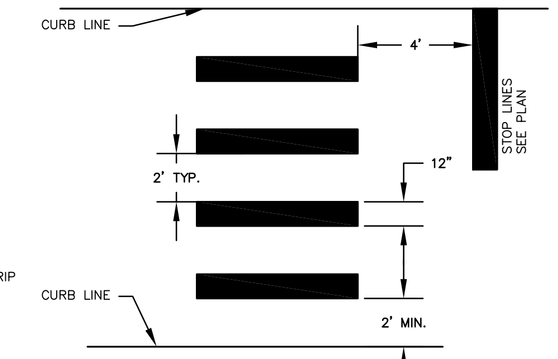

NOTE:
1. ALL TWELVE INCH (12") LINES SHALL BE APPLIED IN ONE APPLICATION, NO COMBINATION OF LINES (TWO– 6 INCH LINES) WILL BE ACCEPTED.
2. LONGITUDINAL CROSSWALK LINES TO BE PARALLEL TO CURB LINE.
3. ALL LONGITUDINAL CROSSWALK LINES TO BE THE SAME LENGTH AND PROPERLY DRESSED.
4. CROSSWALK SIDE SLOPE SHALL NOT EXCEED 1.5%

CROSSWALK
NOT TO SCALE

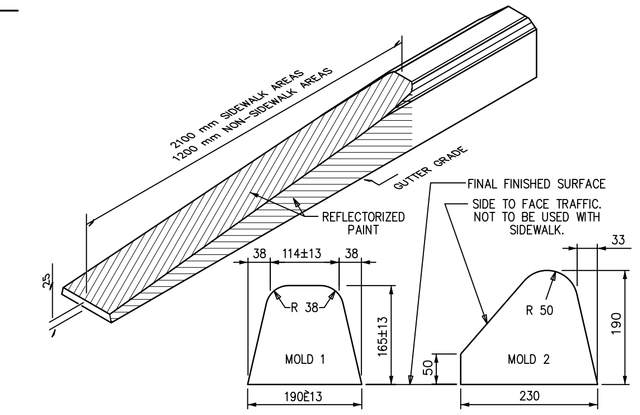

CURB MOLD 2 WILL BE USED IN ALL SITUATIONS EXCEPT FOR WHERE THE CURB FORMS THE EDGE OF THE SIDEWALK MOLD 1 SHALL BE USED IN CONJUNCTION WITH SIDEWALKS OR WHERE THERE IS A POTENTIAL FOR SIDEWALKS.

CURB TYPE 3
BITUMINOUS CURB
NOT TO SCALE

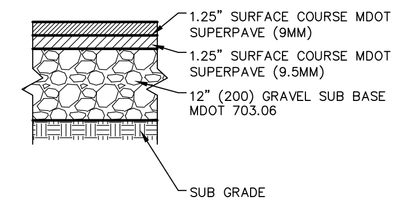

NOTE:
INCREASE ASPHALT COURSES TO 1.5" AT ALL DRIVEWAY CROSSINGS.

BITUMINOUS CONCRETE WALK
NOT TO SCALE

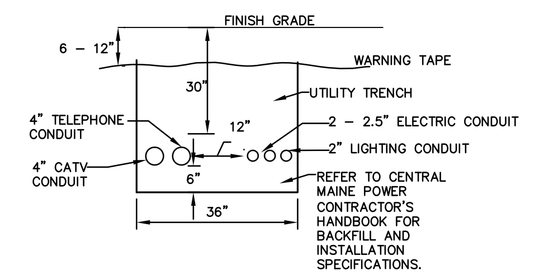

UNDERGROUND CONDUIT TRENCH
NOT TO SCALE

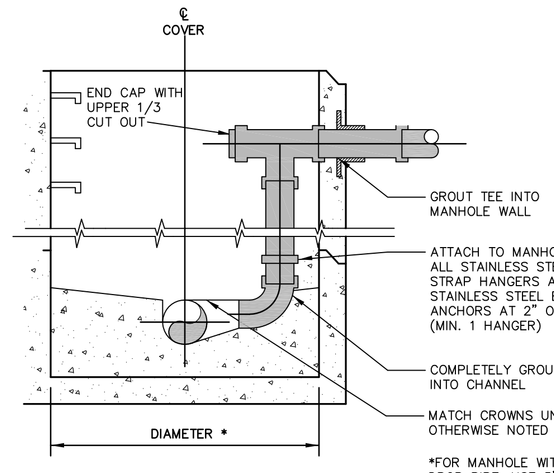

*FOR MANHOLE WITH 12" DIA. DROP PIPE, USE 5' DIAMETER, OR AS INDICATED. FOR MANHOLES WITH TWO OR MORE DROP STRUCTURES, USE 6'DIA, OR AS INDICATED

INSIDE DROP MANHOLE WITH PVC PIPE
NOT TO SCALE

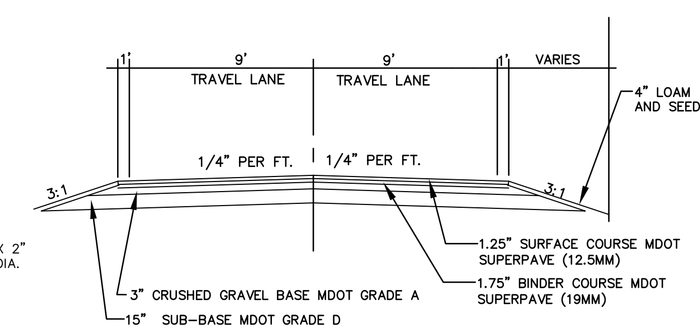

PRIVATE 18' DRIVES TYPICAL CROSS SECTION
NOT TO SCALE

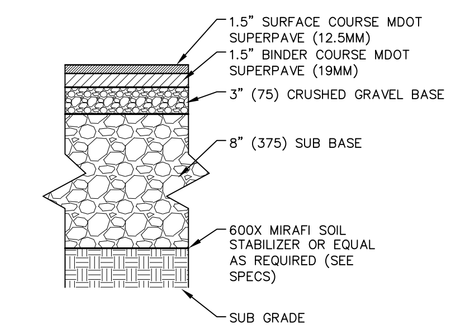

BITUMINOUS CONCRETE DRIVE AT UNITS
NOT TO SCALE

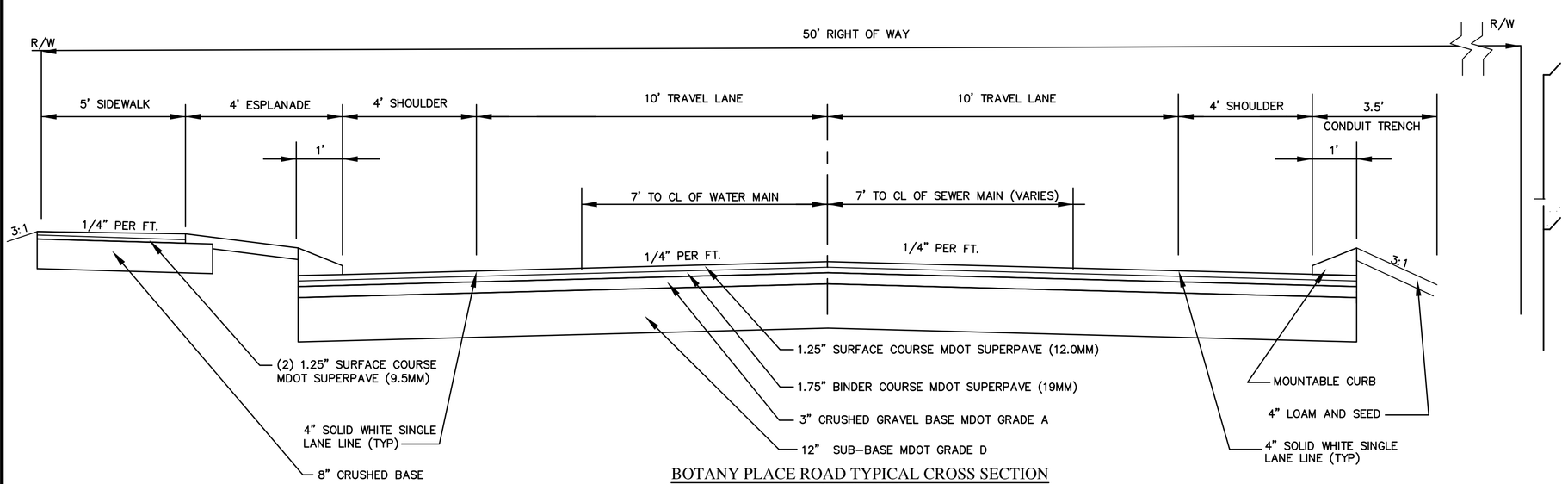

BOTANY PLACE ROAD TYPICAL CROSS SECTION
NOT TO SCALE

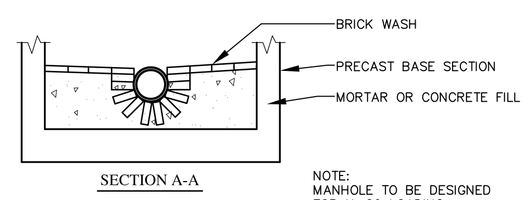

SECTION A-A

NOTE:
MANHOLE TO BE DESIGNED FOR H–20 LOADING

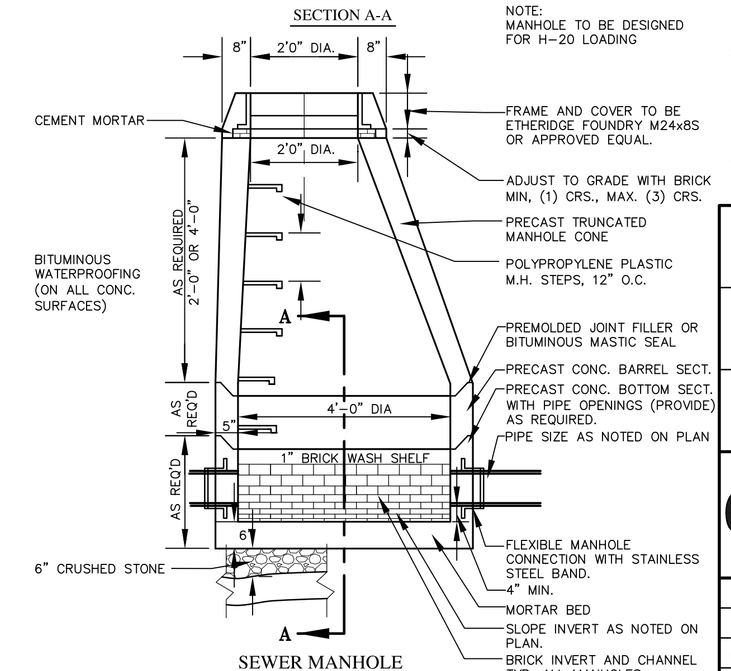

SEWER MANHOLE
NOT TO SCALE

STATE OF MAINE
CURTIS Y. NEUFELD
9779
REGISTERED
PROFESSIONAL ENGINEER

7.	01–22–14	ISSUED WITH PHASE 7	CYN
6.	05–15–13	ISSUED WITH PHASE 6	CYN
5	08–24–11	ISSUED FOR CONSTRUCTION	BVD
4.	12–29–10	SUBMITTED FOR TOWN REVIEW	RPL
3.	10–05–04	ADDED GENERAL NOTE 17 SUBMITTED TO MDEP FOR APPROVAL	REH
2.	08–03–04	SUBMITTED TO MDEP FOR REVIEW AND APPROVAL	REH
1.	04–26–04	REVISED TYPICAL CROSS SECTION, ISLAND, CURB AND PAVEMENT SECTION DETAILS, ADDED VERTICAL GRANITE DETAIL	REH

GENERAL NOTES AND DETAILS

BOTANY PLACE – RESIDENTIAL CONDOMINIUMS
BOTANY PLACE, LLC

CUMBERLAND COUNTY
P.O. BOX 811 – BRUNSWICK, MAINE

SITELINES P.A.
ENGINEERS ■ PLANNERS ■ SURVEYORS
8 CUMBERLAND STREET, BRUNSWICK, ME 04011
(207) 725-1200 FAX 725-1114 EMAIL: siteline@blazenetme.net

FIELD WK: DIRIGO	SCALE: N.T.S.	SHEET: 4
DRN BY: REH	JOB #: 992	
CH'D BY: KPC	SS:	
DATE: 03-23-04	FILE: 992DETAILS	

EROSION AND SEDIMENTATION NOTES:

1. CONTRACTOR SHALL FOLLOW BEST MANAGEMENT PRACTICES OF THE CUMBERLAND COUNTY SOIL CONSERVATION SERVICE AND THE MAINE DEP BEST MANAGEMENT PRACTICES HANDBOOK.

GENERAL EROSION AND SEDIMENTATION CONTROL PRACTICES:

EROSION/SEDIMENT CONTROL DEVICES:

THE FOLLOWING EROSION SEDIMENTATION CONTROL DEVICES ARE PROPOSED FOR CONSTRUCTION ON THIS PROJECT. INSTALL THESE DEVICES AS INDICATED ON THE PLANS.

1 SILT FENCE: SILT FENCE WILL BE INSTALLED ALONG THE DOWN GRADING EDGES OF DISTURBED AREAS TO TRAP RUNOFF BORNE SEDIMENTS UNTIL THE SITE IS STABILIZED. IN AREAS WHERE STORMWATER DISCHARGES THE SILT FENCE WILL BE REINFORCED WITH HAY BALES TO HELP MAINTAIN THE INTEGRITY OF THE SILT FENCE AND TO PROVIDE ADDITIONAL TREATMENT.

2. HAY BALES: HAY BALES TO BE PLACED IN LOW FLOW DRAINAGE SWALES AND PATHS TO TRAP SEDIMENTS AND REDUCE RUNOFF VELOCITIES. DO NOT PLACE HAY BALES IN FLOWING WATER OR STREAMS.

3. RIPRAP: PROVIDE RIPRAP IN AREAS WHERE CULVERTS DISCHARGE OR AS SHOWN ON THE PLANS.

4. LOAM, SEED, & MULCH: ALL DISTURBED AREAS, WHICH ARE NOT OTHERWISE TREATED, SHALL RECEIVE PERMANENT SEEDING AND MULCH TO STABILIZE THE DISTURBED AREAS. THE DISTURBED AREAS WILL BE REVEGETATED WITHIN 5 DAYS OF FINAL GRADING. SEEDING REQUIREMENTS ARE PROVIDED AT THE END OF THIS SPECIFICATION.

5. STRAW AND HAY MULCH: USED TO COVER DENUDED AREAS UNTIL PERMANENT SEED OR EROSION CONTROL MEASURES ARE IN PLACE. MULCH BY ITSELF CAN BE USED ON SLOPES LESS THAN 15% IN SUMMER AND 8% IN WINTER. JUTE MESH IS TO BE USED OVER MULCH ONLY. CURLEX II AND EXCELSIOR MAY BE USED IN PLACE OF JUTE MESH OVER MULCH.

6. MULCH NETTING SHALL BE USED TO ANCHOR MULCH IN ALL DRAINAGE WAYS WITH A SLOPE GREATER THAN 3% FOR SLOPES EXPOSED TO DIRECT WINDS AND FOR ALL OTHER SLOPES GREATER THAN 8%.

TEMPORARY EROSION/SEDIMENTATION CONTROL MEASURES:

PROVIDE THE FOLLOWING TEMPORARY EROSION/SEDIMENTATION CONTROL MEASURES DURING CONSTRUCTION OF THE DEVELOPMENT:

1. SILTATION FENCE ALONG THE DOWNGRADIENT SIDE OF THE PARKING AREAS AND OF ALL FILL SECTIONS. THE SILTATION FENCE WILL REMAIN IN PLACE UNTIL THE SITE IS 85% REVEGETATED.

2. HAY BALES PLACED AT KEY LOCATIONS TO SUPPLEMENT THE SILT FENCE.

3. PROTECT TEMPORARY STOCKPILES OF STUMPS, GRUBBINGS, OR COMMON EXCAVATION AS FOLLOWS:
   A. SOIL STOCKPILE SIDE SLOPES SHALL NOT EXCEED 2:1.
   B. AVOID PLACING TEMPORARY STOCKPILES IN AREAS WITH SLOPES OVER 10 PERCENT, OR NEAR DRAINAGE SWALES. SEE ITEM 3 IN CONSTRUCTION PHASE NOTES BELOW.
   C. STABILIZE STOCKPILES WITHIN 15 DAYS BY TEMPORARILY SEEDING WITH A HYDROSEED METHOD CONTAINING AN EMULSIFIED MULCH TACKIFIER OR BY COVERING THE STOCKPILE WITH MULCH.
   D. SURROUND STOCKPILE SOIL WITH SILTATION FENCE AT BASE OF PILE.

4. ALL DENUDED AREAS WHICH HAVE BEEN ROUGH GRADED AND ARE NOT LOCATED WITHIN THE BUILDING PAD, OR PARKING AND DRIVEWAY SUBBASE AREA SHALL RECEIVE MULCH WITHIN 30 DAYS OF INITIAL DISTURBANCE OF SOIL OR WITHIN 15 DAYS AFTER COMPLETING THE ROUGH GRADING OPERATIONS. IN THE EVENT THE CONTRACTOR COMPLETES FINAL GRADING AND INSTALLATION OF LOAM AND SOD WITHIN THE TIME PERIODS PRESENTED ABOVE, INSTALLATION OF MULCH AND NETTING, WHERE APPLICABLE, IS NOT REQUIRED.

5. IF WORK IS CONDUCTED BETWEEN OCTOBER 15 AND APRIL 15, ALL DENUDED AREAS ARE TO BE COVERED WITH HAY MULCH, APPLIED AT TWICE THE NORMAL APPLICATION RATE, AND ANCHORED WITH FABRIC NETTING. THE PERIOD BETWEEN FINAL GRADING AND MULCHING SHALL BE REDUCED TO A 15 DAY MAXIMUM.

6. TEMPORARY EROSION CONTROL MEASURES SHALL BE REMOVED ONCE THE SITE HAS BEEN STABILIZED OR IN AREAS WHERE PERMANENT EROSION CONTROL MEASURES HAVE BEEN INSTALLED.

PERMANENT EROSION CONTROL MEASURES:

THE FOLLOWING PERMANENT CONTROL MEASURES ARE REQUIRED BY THIS EROSION/SEDIMENTATION CONTROL PLAN:

1. ALL AREAS DISTURBED DURING CONSTRUCTION, BUT NOT SUBJECT TO OTHER RESTORATION (PAVING, RIPRAP, ETC.), WILL BE LOAMED, LIMED, FERTILIZED AND SEEDED. NATIVE TOPSOIL SHALL BE STOCKPILED AND REUSED FOR FINAL RESTORATION WHEN IT IS OF SUFFICIENT QUALITY.

2. SLOPES GREATER THAN 2:1 WILL RECEIVE RIPRAP.

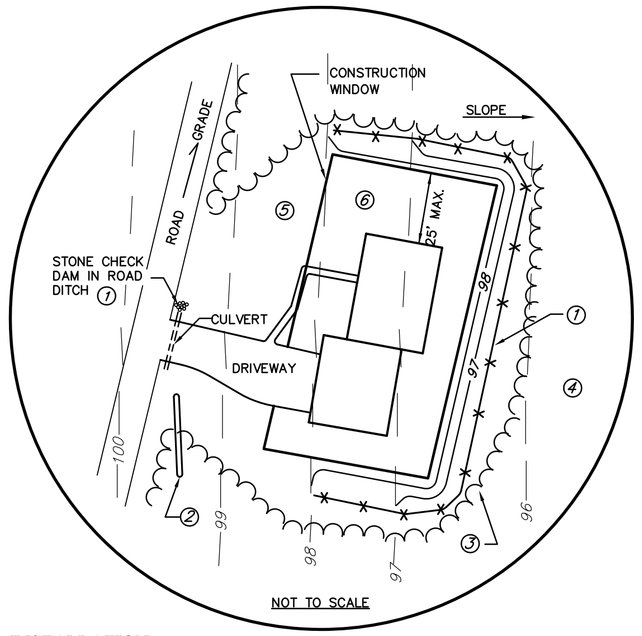

NOT TO SCALE

INSTALLATION:

1. INSTALL SEDIMENT BARRIERS ON YOUR SITE BEFORE DISTURBING SOILS. SEE THE "SEDIMENT BARRIERS" MEASURE FOR DETAILS ON INSTALLATION AND MAINTENANCE.

2. CONSTRUCT A DIVERSION DITCH TO KEEP UPSLOPE RUNOFF OUT OF WORK AREA.

3. MARK CLEARING LIMITS ON THE SITE TO KEEP EQUIPMENT OUT OF AREAS WITH STEEP SLOPES, CHANNELIZED FLOW, OR ADJACENT SURFACE WATERS AND WETLANDS.

4. PRESERVE BUFFERS BETWEEN THE WORK AREA AND ANY DOWNSTREAM SURFACE WATERS AND WETLANDS. SEE THE "BUFFERS" MEASURE FOR BUFFER PRESERVATION.

5. USE TEMPORARY MULCH AND RYE-SEED TO PROTECT DISTURBED SOILS OUTSIDE THE ACTIVE CONSTRUCTION AREA. SEE THE "MULCHING" MEASURE AND "VEGETATION" MEASURE FOR DETAILS AND SPECIFICATIONS FOR THESE CONTROLS.

6. PERMANENTLY SEED AREAS NOT TO BE PAVED WITHIN SEVEN DAYS OF COMPLETING FINAL GRADING. SEE "VEGETATION" MEASURE FOR INFORMATION ON PROPER SEEDING.

MAINTENANCE:

EVERY MONTH THE FIRST YEAR AFTER CONSTRUCTION AND YEARLY THEREAFTER, INSPECT FOR AREAS SHOWING EROSION OR POOR VEGETATION GROWTH. FIX THESE PROBLEMS AS SOON AS POSSIBLE. EACH SPRING REMOVE ANY ACCUMULATION OF DEBRIS OR WINTER SAND THAT WOULD IMPEDE RUNOFF FROM ENTERING A BUFFER OR DITCH.

HOUSE SITE - BEST MANAGEMENT PRACTICES
NOT TO SCALE

CONSTRUCTION PHASE:

THE FOLLOWING GENERAL PRACTICES WILL BE USED TO PREVENT EROSION DURING CONSTRUCTION OF THIS PROJECT.

1. ONLY THOSE AREAS UNDER ACTIVE CONSTRUCTION WILL BE CLEARED AND LEFT IN AN UNTREATED OR UNVEGETATED CONDITION. IF FINAL GRADING, LOAMING AND SEEDING WILL NOT OCCUR WITHIN 15 DAYS, SEE ITEM NO. 4.

2. PRIOR TO THE START OF CONSTRUCTION IN A SPECIFIC AREA, SILT FENCING AND/OR HAY BALES WILL BE INSTALLED AT THE TOE OF SLOPE AND IN AREAS AS LOCATED ON THE PLANS TO PROTECT AGAINST ANY CONSTRUCTION RELATED EROSION. IMMEDIATELY FOLLOWING CONSTRUCTION OF CULVERTS AND SWALES, RIP RAP APRONS SHALL BE INSTALLED, AS SHOWN ON THE PLANS.

3. TOPSOIL WILL BE STOCKPILED WHEN NECESSARY IN AREAS WHICH HAVE MINIMUM POTENTIAL FOR EROSION AND WILL BE KEPT AS FAR AS POSSIBLE FROM THE EXISTING DRAINAGE COURSE. NO STOCKPILE SHALL BE CLOSER THEN 100' OF A RESOURCE INCLUDING, BUT NOT LIMITED TO, WETLANDS, STREAMS, AND OPEN WATER BODIES. ALL STOCKPILES SHALL HAVE A SILTATION FENCE BELOW THEM REGARDLESS OF TIME OF PRESENCE. ALL STOCKPILES EXPECTED TO REMAIN LONGER THAN 15 DAYS SHALL BE:
   A. TREATED WITH ANCHORED MULCH (WITHIN 5 DAYS OF THE LAST DEPOSIT OF STOCKPILED SOIL).
   B. SEEDED WITH CONSERVATION MIX AND MULCHED IMMEDIATELY.
   C. INSTALL SILT FENCE AROUND STOCKPILE AT BASE OF PILE. STOCKPILES TO HAVE SILT FENCE INSTALLED AT TIME OF ESTABLISHMENT AT BASE OF PILE.

4. ALL DISTURBED AREAS EXPECTED TO REMAIN LONGER THAN 30 DAYS SHALL BE EITHER:
   A. TREATED WITH ANCHORED MULCH IMMEDIATELY, OR
   B. SEEDED WITH CONSERVATION MIX OF ANNUAL RYE GRASS (0.9 LBS/1000 SQ. FT) AND MULCHED IMMEDIATELY.

5. ALL GRADING WILL BE HELD TO A MAXIMUM 2:1 SLOPE WHERE PRACTICAL. ALL SLOPES WILL BE STABILIZED WITH PERMANENT SEEDING, OR WITH STONE, WITHIN 5 DAYS AFTER FINAL GRADING IS COMPLETE. (SEE POST-CONSTRUCTION REVEGETATION FOR SEEDING SPECIFICATION.)

6. ALL CULVERTS WILL BE PROTECTED WITH STONE RIPRAP (D50 = 6" UNLESS OTHERWISE SPECIFIED) AT INLETS AND OUTLETS.

POST-CONSTRUCTION REVEGETATION:

THE FOLLOWING GENERAL PRACTICES WILL BE USED TO PREVENT EROSION AS SOON AS AN AREA IS READY TO UNDERGO FINAL GRADING.

1. A MINIMUM OF 4" OF LOAM WILL BE SPREAD OVER DISTURBED AREAS AND GRADED TO A UNIFORM DEPTH AND NATURAL APPEARANCE, OR STONE WILL BE PLACED ON SLOPES TO STABILIZE SURFACES.

2. IF FINAL GRADING IS REACHED DURING THE NORMAL GROWING SEASON (4/15 TO 9/15), PERMANENT SEEDING WILL BE DONE AS SPECIFIED BELOW. PRIOR TO SEEDING, LIMESTONE SHALL BE APPLIED AT A RATE OF 138 LBS/1000 SQ. FT. AND 10:20:20 FERTILIZER AT A RATE OF 18.4 LBS/1000 SQ.FT WILL BE APPLIED. BROADCAST SEEDING AT THE FOLLOWING RATES:

LAWNS	SWALES
KENTUCKY BLUEGRASS 0.46 LBS/1000 SF.	RED TOP 0.05 LBS/1000 SF.
CREEPING RED FESCUE 0.46 LBS/1000 SF.	TALL FESCUE 0.46 LBS/1000 SF.
PERENNIAL RYE GRASS 0.11 LB/1000 SF.	

3. AN AREA SHALL BE MULCHED IMMEDIATELY AFTER IS HAS BEEN SEEDED. MULCHING SHALL CONSIST OF HAY MULCH, HYDRO-MULCH, JUTE NET OVER MULCH, PRE-MANUFACTURED EROSION MATS OR ANY SUITABLE SUBSTITUTE DEEMED ACCEPTABLE BY THE DESIGNER.
   A. HAY MULCH SHALL BE APPLIED AT THE RATE OF 2 TONS PER ACRE. HAY MULCH SHALL BE SECURED BY EITHER: (NOTE: SOIL SHALL NOT BE VISIBLE)
      I. BEING DRIVEN OVER BY TRACKED CONSTRUCTION EQUIPMENT ON GRADES OF 5% AND LESS.
      II. BLANKETED BY TACKED PHOTODEGRADABLE/BIODEGRADABLE NETTING, OR WITH SPRAY, ON GRADES GREATER THAN 5%.
      III. SEE NOTE 6, GENERAL NOTES, AND NOTE 8, WINTER CONSTRUCTION.
   B. HYDRO-MULCH SHALL CONSIST OF A MIXTURE OF EITHER ASPHALT, WOOD FIBER OR PAPER FIBER AND WATER SPRAYED OVER A SEEDED AREA. HYDRO-MULCH SHALL NOT BE USED BETWEEN 9/15 AND 4/15.

4. CONSTRUCTION SHALL BE PLANNED TO ELIMINATE THE NEED FOR SEEDING BETWEEN SEPTEMBER 15 AND APRIL 15. SHOULD SEEDING BE NECESSARY BETWEEN SEPTEMBER 15 AND APRIL 15 THE FOLLOWING PROCEDURE SHALL BE FOLLOWED. ALSO REFER TO NOTE 9 OF WINTER CONSTRUCTION.
   A. ONLY UNFROZEN LOAM SHALL BE USED.
   B. LOAMING, SEEDING AND MULCHING WILL NOT BE DONE OVER SNOW OR ICE COVER. IF SNOW EXISTS, IT MUST BE REMOVED PRIOR TO PLACEMENT OF SEED.
   C. WHERE PERMANENT SEEDING IS NECESSARY, ANNUAL WINTER RYE (1.2 LBS/1000 SQ.FT) SHALL BE ADDED TO THE PREVIOUSLY NOTED AREAS.
   D. WHERE TEMPORARY SEEDING IS REQUIRED, ANNUAL WINTER RYE (2.6 LBS/1000 SQ. FT.) SHALL BE SOWN INSTEAD OF THE PREVIOUSLY NOTED SEEDING RATE.
   E. FERTILIZING, SEEDING AND MULCHING SHALL BE APPLIED TO LOAM THE DAY THE LOAM IS SPREAD BY MACHINERY.
   F. ALTERNATIVE HAY MULCH SHALL BE SECURED WITH PHOTODEGRADABLE/BIODEGRADABLE NETTING. TRACKING BY MACHINERY ALONE WILL NOT SUFFICE.

5. FOLLOWING FINAL SEEDING, THE SITE WILL BE INSPECTED EVERY 30 DAYS UNTIL 85% COVER HAS BEEN ESTABLISHED. RESEEDING WILL BE CARRIED OUT BY THE CONTRACTOR WITHIN 10 DAYS OF NOTIFICATION BY THE ENGINEER THAT THE EXISTING CATCH IS INADEQUATE.

MONITORING SCHEDULE:

THE CONTRACTOR IS RESPONSIBLE FOR INSTALLING, MONITORING, MAINTAINING, REPAIRING, REPLACING AND REMOVING ALL OF THE EROSION AND SEDIMENTATION CONTROLS OR APPOINTING A QUALIFIED SUBCONTRACTOR TO DO SO. MAINTENANCE MEASURES WILL BE APPLIED AS NEEDED DURING THE ENTIRE CONSTRUCTION CYCLE. AFTER EACH RAINFALL, A VISUAL INSPECTION WILL BE MADE OF ALL EROSION AND SEDIMENTATION CONTROLS AS FOLLOWS:

1. HAY BALE BARRIERS, SILT FENCE, AND STONE CHECK DAMS SHALL BE INSPECTED AND REPAIRED ONCE A WEEK OR IMMEDIATELY FOLLOWING ANY SIGNIFICANT RAINFALL. SEDIMENT TRAPPED BEHIND THESE BARRIERS SHALL BE EXCAVATED WHEN IT REACHES A DEPTH OF 6" AND REDISTRIBUTED TO AREAS UNDERGOING FINAL GRADING. SHOULD THE HAY BALE BARRIERS PROVE TO BE INEFFECTIVE, THE CONTRACTOR SHALL INSTALL SILT FENCE BEHIND THE HAY BALES.

2. VISUALLY INSPECT RIPRAP ONCE A WEEK OR AFTER EACH SIGNIFICANT RAINFALL AND REPAIR AS NEEDED. REMOVE SEDIMENT TRAPPED BEHIND THESE DEVICES ONCE IT ATTAINS A DEPTH EQUAL TO 1/2 THE HEIGHT OF THE DAM OR RISER. DISTRIBUTE REMOVED SEDIMENT OFF-SITE OR TO AN AREA UNDERGOING FINAL GRADING.

3. REVEGETATION OF DISTURBED AREAS WITHIN 25' OF DRAINAGE-COURSE/STREAM WILL BE SEEDED WITH THE "MEADOW AREA MIX" AND INSPECTED ON A WEEKLY BASIS OR AFTER EACH SIGNIFICANT RAINFALL AND RESEEDED AS NEEDED. EXPOSED AREAS WILL BE RESEEDED AS NEEDED UNTIL THE AREA HAS OBTAINED 100% GROWTH RATE. PROVIDE PERMANENT RIPRAP FOR SLOPES IN EXCESS OF 3:1 AND WITHIN 25' OF DRAINAGE COURSE.

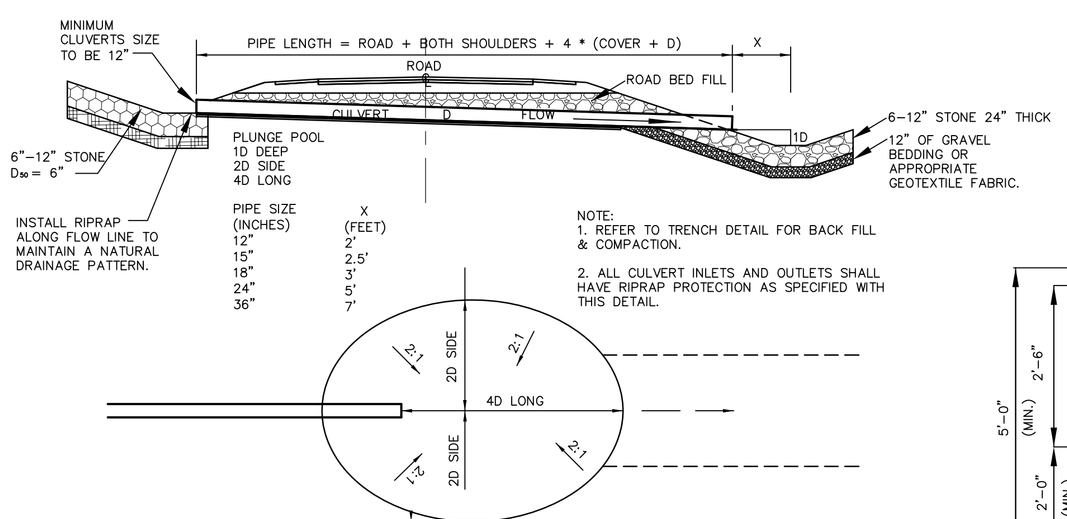

PIPE SIZE (INCHES)	X (FEET)
12"	2'
15"	2.5'
18"	3'
24"	5'
36"	7'

NOTE:
1. REFER TO TRENCH DETAIL FOR BACK FILL & COMPACTION.
2. ALL CULVERT INLETS AND OUTLETS SHALL HAVE RIPRAP PROTECTION AS SPECIFIED WITH THIS DETAIL.

OUTLET	DIA.	D50	X	1D DEEP	2D SIDE	4D LONG
12" CULVERT	12"	6"	2'	1'	2'	4'
15" CULVERT	15"	6"	2.5'	1.25'	2.5'	5
18" CULVERT	18"	6"	3'	1.5'	3'	6'
24" CULVERT	24"	6"	5'	2'	4'	8'
30" CULVERT	30"	6"	6'	2.5'	5'	10'
36" CULVERT	36"	6"	7'	3'	6'	12'

CULVERT INLET / OUTLET PROTECTION
NOT TO SCALE

EROSION CONTROL DURING WINTER CONSTRUCTION:

1. WINTER CONSTRUCTION PERIOD: NOVEMBER 1 THROUGH APRIL 15.

2. WINTER EXCAVATION AND EARTHWORK SHALL BE COMPLETED SUCH THAT NO MORE THAN 1 ACRE OF THE SITE IS WITHOUT STABILIZATION AT ANY ONE TIME.

3. EXPOSED AREA SHALL BE LIMITED TO THOSE AREAS TO BE MULCHED IN ONE DAY PRIOR TO ANY SNOW EVENT. AT THE END OF EACH WORK WEEK NO AREAS MAY BE LEFT UNSTABILIZED OVER THE WEEKEND.

4. CONTINUATION OF EARTHWORK OPERATIONS ON ADDITIONAL AREAS SHALL NOT BEGIN UNTIL THE EXPOSED SOIL SURFACE ON THE AREA BEING WORKED HAS BEEN STABILIZED, SUCH THAT NO LARGER AREA OF THE SITE IS WITHOUT EROSION CONTROL PROTECTION AS LISTED IN ITEM 2 ABOVE.

5. AN AREA SHALL BE CONSIDERED TO HAVE BEEN STABILIZED WHEN EXPOSED SURFACES HAVE BEEN EITHER MULCHED WITH STRAW OR HAY AT A RATE OF 150 LB. PER 1000 S.F. (WITH OR WITHOUT SEEDING) OR DORMANT SEEDED, MULCHED AND ANCHORED SUCH THAT SOIL SURFACE IS NOT VISIBLE THROUGH THE MULCH. NOTE: AN AREA IS ALSO CONSIDERED STABLE IF SODDED, COVERED WITH GRAVEL (PARKING LOTS) OR STRUCTURAL SAND.

6. BETWEEN THE DATES OF OCTOBER 15 AND APRIL 1, LOAM OR SEED WILL NOT BE REQUIRED. DURING PERIODS OF ABOVE FREEZING TEMPERATURES THE SLOPES SHALL BE FINE GRADED AND EITHER PROTECTED WITH MULCH OR TEMPORARILY SEEDED AND MULCHED UNTIL SUCH TIME AS THE FINAL TREATMENT CAN BE APPLIED. IF THE DATE IS AFTER NOVEMBER 1 AND IF THE EXPOSED AREA HAS BEEN LOAMED, FINAL GRADED WITH A UNIFORM SURFACE, THEN THE AREA MAY BE DORMANT SEEDED AT A RATE OF 3 TIMES HIGHER THAN SPECIFIED FOR PERMANENT SEED AND THEN MULCHED. IF CONSTRUCTION CONTINUES DURING FREEZING WEATHER, ALL EXPOSED AREAS SHALL BE CONTINUOUSLY GRADED BEFORE FREEZING AND THE SURFACE TEMPORARILY PROTECTED FROM EROSION BY THE APPLICATION OF MULCH. SLOPES SHALL NOT BE LEFT UNEXPOSED OVER THE WINTER OR ANY OTHER EXTENDED TIME OF WORK SUSPENSION UNLESS TREATED IN THE ABOVE MANNER. UNTIL SUCH TIME AS WEATHER CONDITIONS ALLOW, DITCHES TO BE FINISHED WITH THE PERMANENT SURFACE TREATMENT, EROSION SHALL BE CONTROLLED BY THE INSTALLATION OF BALES OF HAY, SILT FENCE OR STONE CHECK DAMS IN ACCORDANCE WITH THE STANDARD DETAILS SHOWN ON THE DESIGN DRAWINGS. NOTE: DORMANT SEEDING SHOULD NOT BE ATTEMPTED UNLESS SOIL TEMPERATURE REMAINS BELOW 50 DEGREES AND DAY TIME TEMPERATURES REMAIN IN THE 30'S.

7. MULCH NETTING SHALL BE USED TO ANCHOR MULCH IN ALL DRAINAGE WAYS, SLOPES GREATER THAN 3% FOR SLOPES EXPOSED TO DIRECT WINDS AND FOR ALL OTHER SLOPES GREATER THAN 8%. VEGETATED DRAINAGE SWALES SHALL BE LINED WITH EXCELSIOR OR CURLEX.

8. BETWEEN THE DATES OF OCTOBER 15 TO NOVEMBER 1, WINTER RYE IS RECOMMENDED FOR STABILIZATION. AFTER NOVEMBER 1, WINTER RYE IS NOT EFFECTIVE. AROUND NOVEMBER 15 OR LATER, ONCE TEMPERATURES OF THE AIR AND SOIL PERMIT, DORMANT SEEDING IS EFFECTIVE.

9. IN THE EVENT OF SNOWFALL (FRESH OR CUMULATIVE) GREATER THAN 1 INCH DURING WINTER CONSTRUCTION PERIOD ALL SNOW SHALL BE REMOVED FROM THE AREAS OF SEEDING AND MULCHING PRIOR TO PLACEMENT.

SITE INSPECTION AND MAINTENANCE:

1. WEEKLY INSPECTIONS, AS WELL AS ROUTINE INSPECTIONS FOLLOWING RAIN FALLS, SHALL BE CONDUCTED BY THE GENERAL CONTRACTOR OF ALL TEMPORARY AND PERMANENT EROSION CONTROL DEVICES UNTIL FINAL ACCEPTANCE OF THE PROJECT (85% GRASS CATCH). NECESSARY REPAIRS SHALL BE MADE TO CORRECT UNDERMINING OR DETERIORATION. FINAL ACCEPTANCE SHALL INCLUDE A SITE INSPECTION TO VERIFY THE STABILITY OF ALL DISTURBED AREAS AND SLOPES. UNTIL FINAL INSPECTION, ALL EROSION AND SEDIMENTATION CONTROL MEASURES SHALL IMMEDIATELY BE CLEANED, AND REPAIRED BY THE GENERAL CONTRACTOR AS REQUIRED. DISPOSAL OF ALL TEMPORARY EROSION AND CONTROL DEVICES SHALL BE THE RESPONSIBILITY OF THE GENERAL CONTRACTOR.

IT IS RECOMMENDED THAT THE OWNER HIRE THE SERVICES OF THE DESIGN ENGINEER TO PROVIDE COMPLIANCE INSPECTIONS (DURING ACTIVE CONSTRUCTION) RELATIVE TO IMPLEMENTATION OF THE STORMWATER AND EROSION CONTROL PLANS. SUCH INSPECTIONS SHOULD BE LIMITED TO ONCE A WEEK OR AS NECESSARY AND BE REPORTABLE TO THE OWNER, TOWN AND DEP.

2. SHORT-TERM SEDIMENTATION MAINTENANCE SHALL BE THE RESPONSIBILITY OF THE CONTRACTOR TO CLEAN OUT ALL SWALES AND STRUCTURES PRIOR TO TURNING PROJECT OVER.

3. LONG-TERM PROVISIONS FOR PERMANENT MAINTENANCE OF ALL EROSION AND SEDIMENTATION CONTROL DEVICES AFTER ACCEPTANCE OF THE PROJECT SHALL BE THE RESPONSIBILITY OF THE OWNER, TOWN OR THEIR DESIGNEE.

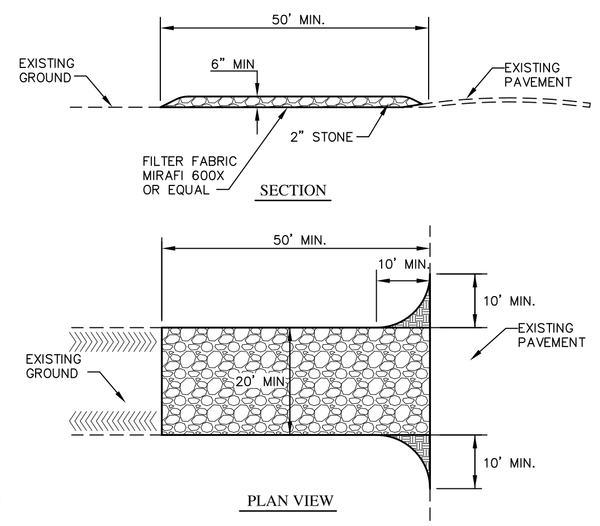

STABILIZED CONSTRUCTION ENTRANCE
NOT TO SCALE

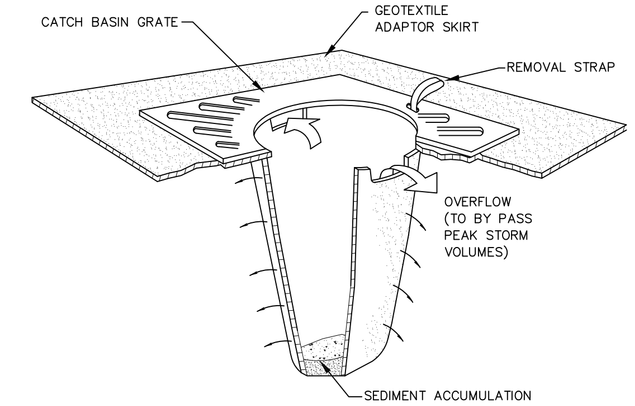

NOTES:
1. CATCH BASIN PROTECTION TO BE "SILTSTACK" (BY ACF ENVIRONMENTAL) OR "STREAM GUARD" (BY FOSS ENVIRONMENTAL SERVICES).

2. INSERT TO BE EMPTIED IN AN APPROVED MANNER WHEN IT IS 1/2 FULL OF SEDIMENT.

3. INSPECT INSERT AFTER ALL RAINFALL EVENTS, REPAIR AND MAINTAIN AS REQUIRED.

TEMPORARY INLET PROTECTION
NOT TO SCALE

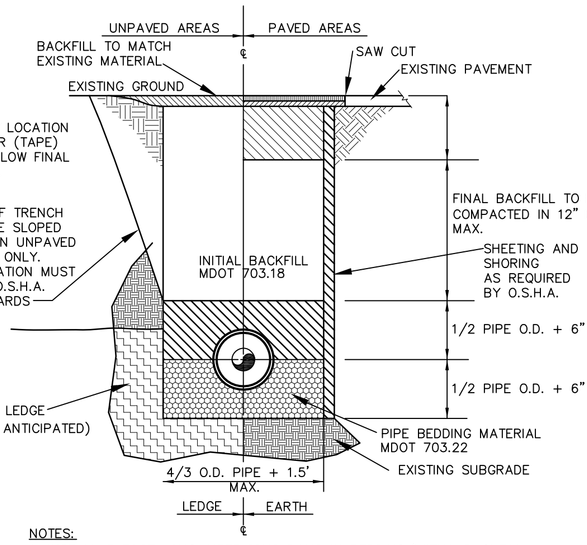

NOTES:
1. INSTALL 3 FOOT LONG IMPERVIOUS DAMS IN BEDDING/INITIAL BACKFILL MATERIAL EVERY 100 FEET TO PREVENT TRENCH GROUNDWATER FROM BEING CHANNELED ALONG BEDDING/INITIAL BACKFILL
2. REFER TO LATEST MDOT SPECIFICATIONS FOR BEDDING AND BACKFILL REQUIREMENTS.
3. INITIAL BACKFILL TO BE 12 INCHES OVER TOP OF PVC PIPE ONLY.

TYPICAL TRENCH DETAIL
NOT TO SCALE

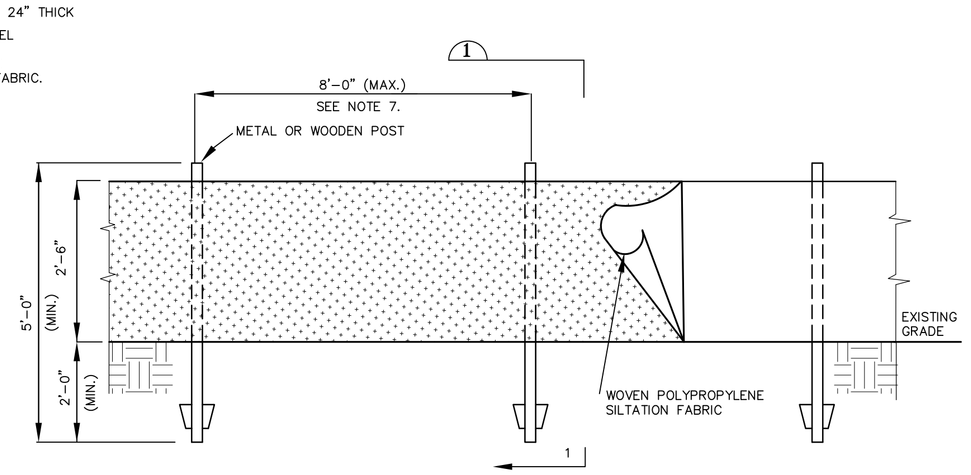

ELEVATION

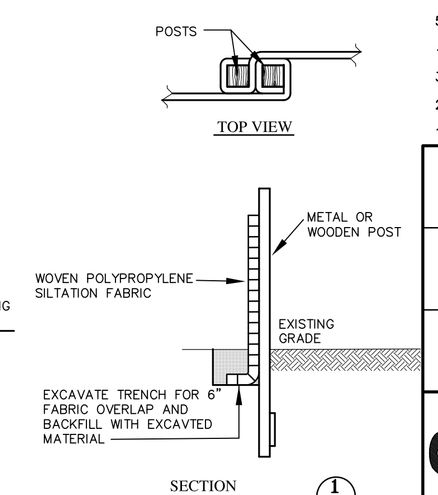

SILT FENCE DETAIL
N.T.S.

INSTALLATION:
1. EXCAVATE A 6" X 6" TRENCH ALONG THE LINE OF PLACEMENT FOR THE FILTER BARRIER.
2. UNROLL A SECTION AT A TIME AND POSITION THE POSTS AGAINST THE BACK (DOWNSTREAM) WALL OF THE TRENCH.
3. DRIVE POSTS INTO THE GROUND UNTIL APPROXIMATELY 2" OF FABRIC IS LYING ON THE TRENCH BOTTOM.
4. LAY THE TOE-IN FLAP OF FABRIC ONTO THE UNDISTURBED BOTTOM OF THE TRENCH. BACK FILL THE TRENCH AND TAMP THE SOIL.
5. JOIN SECTION AS SHOWN IN TOP VIEW.
6. BARRIER SHALL BE MIRAFI SILT FENCE OR EQUAL.

STATE OF MAINE
CURTIS Y. NEUFELD
9779
REGISTERED PROFESSIONAL ENGINEER

6.	01-22-14	ISSUED WITH PHASE 7	CYN
5.	05-15-13	ISSUED WITH PHASE 6	CYN
4	08-24-11	ISSUED FOR CONSTRUCTION	BVD
3.	12-29-10	SUBMITTED FOR TOWN REVIEW	RPL
2.	08-09-04	SUBMITTED TO MDEP FOR REVIEW AND APPROVAL REMOVED TRASH RACK DETAIL	REH
1.	08-03-04	ADDED TRASH RACK DETAILS SUBMITTED TO MDEP FOR REVIEW AND APPROVAL	REH

EROSION CONTROL NOTES AND DETAILS

BOTANY PLACE – RESIDENTIAL CONDOMINIUMS
BOTANY PLACE, LLC

CUMBERLAND COUNTY
P.O. BOX 811 – BRUNSWICK, MAINE

SITELINES P.A.
ENGINEERS ■ PLANNERS ■ SURVEYORS
8 CUMBERLAND STREET, BRUNSWICK, ME 04011
(207) 725-1200 FAX 725-1114 EMAIL: siteline@blazenetme.net

FIELD WK: DIRIGO	SCALE: AS SHOWN	SHEET: 5
DRN BY: REH	JOB #: 992	
CH'D BY: KPC	SS:	
DATE: 03-23-04	FILE: 992DETAILS	

LINE TABLE		
LINE	LENGTH	BEARING
L1	50.00	N33°30'17"E
L2	39.72	N88°57'30"W
L3	27.87	N89°08'55"W
L4	38.28	N89°08'55"W
L5	10.67	S88°59'33"E
L6	73.33	N22°49'57"E
L8	10.00	N00°08'10"W
L9	10.00	S00°08'10"E
L10	10.00	S00°08'10"E
L11	50.42	N89°51'50"E
L12	10.00	S00°08'10"E
L14	18.74	S00°11'19"E
L16	35.34	N56°29'43"W
L17	83.05	N81°50'45"E
L18	17.55	N33°50'31"E
L19	51.77	S63°31'40"E
L20	98.76	N56°09'29"W
L21	98.46	N56°09'29"W
L22	134.24	N30°22'29"W
L23	134.24	N30°22'29"W
L24	171.18	N67°30'29"E
L25	171.18	N67°30'29"E
L26	67.47	N58°39'50"W
L27	67.47	N58°39'50"W
L28	224.22	S90°00'00"E
L29	224.22	S90°00'00"E
L30	70.83	N61°46'30"E
L31	70.83	N61°46'30"E
L32	9.68	N89°51'50"E
L33	18.00	N89°44'29"W
L34	63.87	S00°08'10"E
L35	13.00	S90°00'00"E
L36	149.42	S00°08'10"E
L37	5.85	S26°56'38"W
L38	48.67	N05°58'13"E
L39	20.48	N22°36'56"E
L40	179.05	N00°08'10"W

CURVE TABLE		
CURVE	LENGTH	RADIUS
C1	78.75	175.00
C2	101.25	225.00
C3	322.47	225.00
C4	250.81	175.00
C5	352.31	375.00
C6	399.28	425.00
C7	232.44	425.00
C8	205.10	375.00
C9	184.73	375.00
C10	160.10	325.00
C11	86.78	175.00
C12	111.57	225.00
C13	92.37	625.00
C14	84.70	575.00
C15	31.67	20.00
C16	31.81	20.00
C17	90.64	2831.79
C19	51.52	109.00
C20	10.40	19.00
C21	42.04	375.00
C22	15.97	14.00

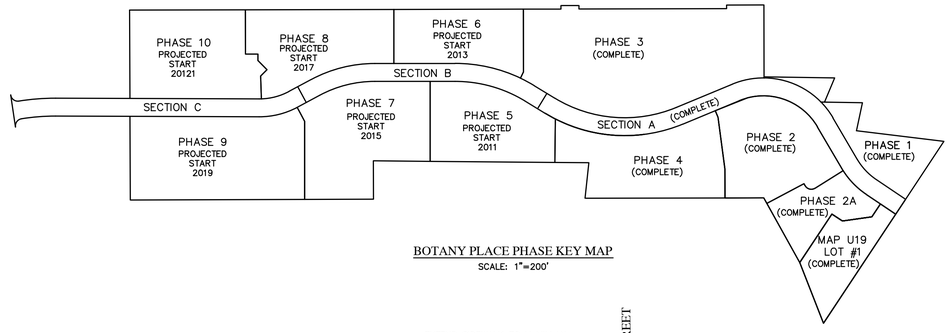

BOTANY PLACE PHASE KEY MAP

SCALE: 1"=200'

BOTANY PLACE PHASE ACREAGE:

MAP U19 LOT 2	
PHASE 1 (COMPLETE)	0.82 ACRES
PHASE 2 (COMPLETE)	1.71 ACRES
PHASE 2A (COMPLETE)	0.83 ACRES
PHASE 3 (COMPLETE)	4.15 ACRES
PHASE 4 (COMPLETE)	1.91 ACRES
PHASE 5	1.57 ACRES
PHASE 6	1.32 ACRES
PHASE 7	2.18 ACRES
PHASE 8	1.67 ACRES
PHASE 9	2.62 ACRES
PHASE 10	2.02 ACRES
TOTAL PHASES	20.80 ACRES
BOTANY PLACE DRIVE ROW	3.09 ACRES
MAP U19 LOT 1	0.90 ACRES
TOTAL ACREAGE	24.79 ACRES

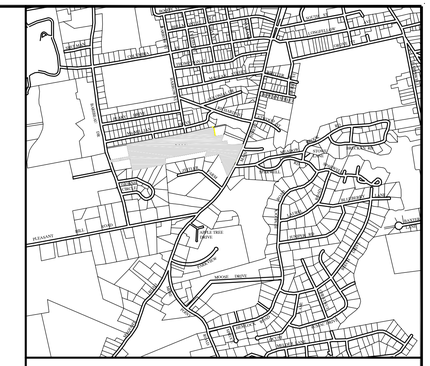

LOCATION MAP

NOT TO SCALE

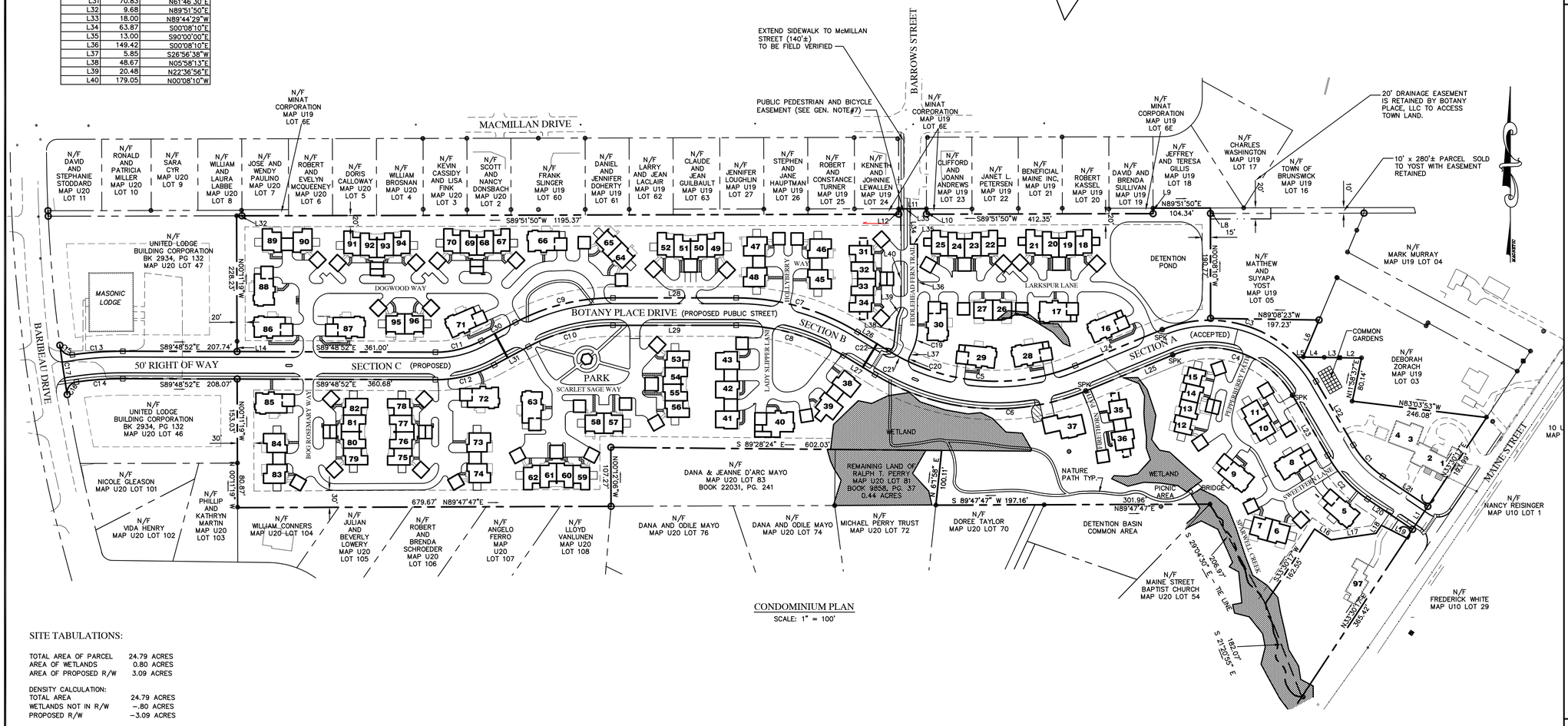

CONDOMINIUM PLAN

SCALE: 1" = 100'

PLAN REFERENCE:

1. "BOUNDARY SURVEY FOR BOTANY PLACE, LLC MAINE STREET BRUNSWICK, MAINE" DATED MAY 1, 2004 PREPARED BY DIRIGO LAND SERVICES, INC. RECORDED AT THE CUMBERLAND REGISTRY OF DEEDS, PLAN BOOK 204 PAGE 372 JUNE 22, 2004

GENERAL NOTES:

1. THE SITE IS OWNED BY BOTANY PLACE L.L.C, P.O. BOX 811, BRUNSWICK, MAINE 04011

2. TOTAL AREA OF EXISTING LOTS = 24.53 AC.

3. ORDINANCE STANDARDS:
ZONE: R4 (MERRIDITH DRIVE –WEST MCKEEN STREET NEIGHBORHOODS)
MINIMUM LOT SIZE: 15,000 S.F.
DIMENSION REQUIREMENTS:
1.) MINIMUM LOT WIDTH: 100'
2.) YARD DEPTHS
A) FRONT = 20'
B) REAR = 20'
C) SIDE = 15'
3.) MAXIMUM BUILDING HEIGHT = 35 '
MAXIMUM IMPERVIOUS SURFACE COVERAGE = 35%
MAXIMUM BUILDING FOOTPRINT PER STRUCTURE = 5,000 S.F.
MAXIMUM DENSITY USING PUBLIC SEWER = 5 UNITS PER ACRE
MAXIMUM DENSITY USING SUBSURFACE WASTEWATER DISPOSAL SYSTEMS = 1 UNIT PER 30,000 S.F.

4. THE SURFICAL SOILS ARE CLASSIFIED BY THE SOIL SURVEY FOR SAGADAHOC COUNTY, MAINE BY THE SOIL CONSERVATION SERVICE

WmB – WINDSOR LOAMY SAND. 0 TO 8% SLOPES

5. PHASES 2A THROUGH 10 WILL TRIGGER THE MDEP SITE LOCATION OF DEVELOPMENT THRESHOLD. SEE DEPARTMENT ORDER #L-21954-87-A-N, DATED NOVEMBER 3, 2004 FOR APPROVAL.

6. NO FENCES SHALL BE PLACED WITHIN TWO (2) FEET OF THE BACK EDGE OF SIDEWALKS.

7. PUBLIC EASEMENT FOR PEDESTRIAN AND BICYCLE USES ONLY WILL EXTEND OVER THE PRIVATE SIDEWALK, ROADWAY, AND BICYCLE PATH BETWEEN BOTANY PLACE DRIVE AND BARROWS STREET.

8. THE PARK, DETENTION POND, PICNIC AREA AND TRAIL SHALL BE OWNED AND MAINTAINED BY THE HOMEOWNER'S ASSOCIATION.

9. APPROXIMATE WETLAND IMPACT IS 1,620 S.F.

10. TOTAL IMPERVIOUS AREA ORIGNAL APPRVALS:
TOTAL IMPERVIOUS AREA ALLOWED: 25.01 AC. x 0.35 = 8.75 AC.
TOTAL IMPERVIOUS AREA APPROVED: 8.56 AC.
ADDITIONAL IMPERVIOUS AREA (UNIT 37): 600 SF (0.01 AC.)

13.	12–29–10	REVISED PHASE 5 AND UPDATE PARCEL INFORMATION SUBMITTED FOR TOWN REVIEW	RPL
12.	10–30–09	ADD ADDITIONAL PARCEL FROM PERRY REVISE TOTAL PROJECT ACREAGE	KPC
11	10–23–09	ADD ADDITIONAL DRIVEWAY AREA UNIT 37	KPC
10.	06–24–09	REVISED NATURE PATH AND DRIVEWAYS. ALSO ADD COMMON GARDENS	RPL
9.	06–15–09	REMOVED 15' EASEMENT; UPDATE PERRY LOT DATA	RPL
8.	05–04–09	ADDED PERRY EASEMENT AMENDMENT, DETAIL "A" AND NOTE 10 TO PLAN	RPL
7.	11–16–04	REVISED PEDESTRIAN EASEMENT, CURVE AND LINE TABLES REVISED PHASES 3, 4 & 8 LAYOUT, UPDATED ACCORDINGLY	REH
6.	08–09–04	REVISED POND LAYOUT, RENUMBERED UNITS SUBMITTED TO MDEP FOR REVIEW AND APPROVAL	REH
5.	08–03–04	REVISED SITE LAYOUT FOR PHASE 3 AND 8, ADDED POND SUBMITTED TO MDEP FOR REVIEW AND APPROVAL	REH
4.	06–28–04	ADDED PEDESTRIAN AND BICYCLE EASEMENT TO TOWN	REH
3.	06–22–04	REVISED LINE AND CURVE TABLE SUBMITTED MYLARS FOR PLANNING BOARD SIGNATURES UPDATED PLAN REFERENCE NOTE, LINE TABLE	REH
2.	05–06–04	ADDED PRIVATE DRIVE NAMES AND PHASE ACREAGE TABLE	REH
1.	04–30–04	ADDED PORTIONS OF MAP U19 LOT 6E ACQUIRED, ABUTTERS, DRAINAGE EASEMENT, REVISED LINE TABLE AND SITE TABS	REH

SITE TABULATIONS:

TOTAL AREA OF PARCEL	24.79 ACRES
AREA OF WETLANDS	0.80 ACRES
AREA OF PROPOSED R/W	3.09 ACRES
DENSITY CALCULATION:	
TOTAL AREA	24.79 ACRES
WETLANDS NOT IN R/W	–.80 ACRES
PROPOSED R/W	–3.09 ACRES
NET SITE AREA	20.90 ACRES
NUMBER OF UNITS ALLOWED	104
NUMBER OF UNITS PROPOSED	97 (APPROVED)
NUMBER OF UNITS COMPLETE	34
NUMBER OF UNITS REMAINING	62 (UNIT 44 ELIMINATED)

DENSITY = 10,116± S.F. PER UNIT

CUMBERLAND COUNTY REGISTRY OF DEEDS:

RECEIVED_____

AT _____ HRS _____ MIN ___ M, AND

FILED IN PLAN BOOK _____ PAGE _____.

ATTESTED: _____, REGISTER

APPROVED BY THE TOWN OF BRUNSWICK DIRECTOR OF PLANNING AND DEVELOPMENT AS A MINOR MODIFICATION IN ACCORDANCE WITH SECTION 403.3B OF THE BRUNSWICK TOWN ORDINANCE.

DIRECTOR OF PLANNING DATE:

GRAPHIC SCALE

100 0 50 100 200 400

(IN FEET)
1 inch = 100 ft.

SURVEYOR'S CERTIFICATION:

THIS SURVEY CONFORMS TO THE MAINE BOARD OF LICENSURE FOR PROFESSIONAL LAND SURVEYORS STANDARDS OF PRACTICE WITH THE FOLLOWING CONDITIONS:
1.) NO SURVEYOR'S REPORT WRITTEN
2.) NO DEED DESCRIPTIONS WRITTEN
3.) NO MONUMENTATION SET AS OF THIS DATE

STATE OF MAINE KEVIN P. CLARK #2245 PROFESSIONAL LAND SURVEYOR

_____ DATE

KEVIN P. CLARK, PLS #2245

NOT VALID UNLESS EMBOSSED HERE

Botany Place
Carefree Neighborhood Living

CONDOMINIUM PLAN AMENDMENT 1

BOTANY PLACE RESIDENTIAL CONDOMINIUMS

PREPARED FOR: BOTANY PLACE COA BRUNSWICK, MAINE

SITELINES P.A.
ENGINEERS ■ PLANNERS ■ SURVEYORS
8 CUMBERLAND STREET, BRUNSWICK, ME 04011
(207) 725-1200 FAX 725-1114 EMAIL: siteline@blazenetme.net

FIELD WK: DIRIGO	SCALE: 1" = 100'	SHEET: 2
DRN BY: REH	JOB #: 992	
CH'D BY: KPC	SS:	
DATE: 03-30-04	FILE: 992Site_all	

X:\Land Projects\992\dwg\992ST2_ALL_CONDO_AMEND1.dwg SHEET 2: 12/29/2010 1:07:24 PM, Rob, 1:1, Siteline, PA