APPLICATION/CHECK LIST
SPECIAL PERMIT FOR UNCLASSIFIED AND OMMITTED USES
BRUNSWICK PLANNING BOARD

1. Applicant(installer):

   Name: ReVision Energy, LLC
   Address: 142 Presumpscot Street
   Portland, ME 04103
   Phone #: 207-221-6342, Attn: Allison Gelmarich

2. Business(nonprofit management association):

   Name: Crystal Spring Farm Community Solar Association
   Address: 44 Thompson Street
   Brunswick, ME 04011
   Phone #: 207-725-7282, Attn: Steve Weems

3. Property/~~Building Owner~~: Lessee/Owner

   a. Lessee: Seth Kroeck & Marla Bannon
   Crystal Spring Farm
   277 Pleasant Hill Rd
   Brunswick, ME 04011
   207-729-1112,
   Attn: Seth Kroeck

   b. Fee Owner:
   Name: Brunswick-Topsham Land Trust
   Address: 108 Maine Street
   Brunswick, ME 04011
   207-729-7694, Attn: Angela Twitchell

4. Assessor's Tax Map # 22 Lot # 163 of subject property.

5. Zoning District Coastal Protection 1

6. Street Address of Parcel(s) For Consideration: 277 Pleasant Hill Road

7. Planning Area (See Appendix I): Rural Coastal Protection Planning Area

Lessee/ Owner Signature: [signature] / [signature], President, BTLT

Applicant Signature (*if different*): Allison H Gelmarich

* Project Description

Business Signature [signature]

SUBMISSION REQUIREMENTS

- Site Plan. If copies are greater than 11" x 17", submit 17 copies of all materials. Otherwise, one copy is sufficient. Site plan should include all elements indicated in the application packet.

On this form, or on a separate letter to the Planning Board, please indicate your responses to the following:

* The proposed project is a solar electricity array. Please refer to the accompanying Project Description and explanation of the roles of the applicant and other parties listed above.

1. How does your application further the Planning Goals for the Planning Area in which your property is located. Please indicate each of the Planning Area Goals with your response.
The solar array will protect marine resources by reducing CO_2 emissions by about 100,000 lbs/year, thereby helping to mitigate ocean warming and acidification. Protects the watershed by creating no impervious surfaces while generating clean, renewable energy. This project will benefit Crystal Spring Farm, enhancing the viability of local agriculture production and conservation of rural open space. The scale of the project is compatible with the rural character of the area. It will demonstrate how low-impact, clean energy can be produced locally.

2. How many square feet of space is the proposed use going to occupy? 9,600 (see below). Is this use to be located within an existing structure? NO If a new structure(s) is proposed how many square feet is the structure(s)? Please note the 9,600 sf figure (above) is the footprint of the array. It will be located in an open field about 3.5 feet above the ground on steel poles (no excavation, no foundation, and no impervious surface (except for the diameter of the poles) and allowing grazing up to and under the array.

3. How many people are to be employed at this site should the Special Permit be granted?
8 during installation, none during operation.

4. If this involves a residential component, how many dwelling units are proposed? N/A.

5. How many customers are likely to use the site during the course of a day? N/A week? N/A. Please anticipate peak demand. There will be some educational materials for the benefit of interested walkers and others.

6. How many service vehicles per week do you anticipate? None

7. What are the sizes of vehicles that will service the business should the Special Permit be granted? N/A

8. If you are reusing a structure, demonstrate the mutual benefits associated with your application request. (In other words, how will this project provide a benefit to its larger area in spite of the fact that it may be occurring within a pre-existing structure that is generally larger than typically found. This project is designed to be a demonstration and educational project about the benefits of "going solar." It may inspire other landowners to install solar arrays and/or consider the benefits of conserving rural open space by working with a land trust and offer a model for other farmers who want to go solar.

9. Explain how this application enhances or further maintains a pedestrian oriented character for the larger neighborhood. N/A

NOTIFICATION
SPECIAL PERMIT APPLICATION
FOR UNCLASSIFIED AND OMMITTED USES

Pursuant to Section 701 of the Brunswick Zoning Ordinance, land uses that are neither permitted nor prohibited may be considered by the Planning Board, subject to a Special Permit. Notice is required to be forwarded to any property owner within 200 feet of the lot boundaries of the proposed permit.

Applicant: ReVision Energy, LLC, on behalf of

Business Name: Crystal Spring Farm Community Solar Association, and other cooperating entities

Proposed Land Use: Residential Scale Solar Array (8 families)

Street Address of Property: 277 Pleasant Hill Road

Zoning District of Property: Coastal Protection 1

The Planning Board will conduct a PUBLIC HEARING on this Special Permit application on _____. As a person entitled to notice, you may submit comments on the proposal to the Planning Board, or may provide testimony at the Public Hearing. The Planning Board may deny the Special Permit if it finds that, based on evidence provided by persons entitled to notice that the proposal shall 1) adversely effect the enjoyment or use of your property; or 2) that the proposal will devalue such property.

The application is on file at the Planning Office. For further information contact 725-6660.

Conserving Our Natural Heritage Since 1985

BRUNSWICK-TOPSHAM
LANDTRUST

DIRECTORS
Elizabeth Armstrong
Brad Babson, *President*
Doug Bennett, *Vice President*
William Ferdinand
Jerry Galleher
Kristine Ganong
Christopher Goodwin
Elizabeth Hertz
Mary Johnson, *Treasurer*
Wells Johnson
Esther Lacognata Palmer
Jeff Nelson
Richard Mersereau
Tom Settlemire
Charles Spies
Linton Studdiford
Emily Swan, *Secretary*
Lloyd Van Lunen
Steve Walker
Margaret Wilson

ADVISORY COUNCIL
Janet Bodwell
Claude Bonang
Everett Carson
Dana Cary
Jane Crichton
Forrest Dillon
Nelia Dunbar
Marilyn Dwyer
Rollin Fessenden
Averil Fessenden
Gary Fogg
Spike Haible
Alicia Heyburn
Henry Heyburn
Heather Higbee
Eileen Johnson
Fred Koerber
John Lichter
N. Macauley Lord
Lisa Martin
William Mason
Daniel Morgenstern
Arlene Morris
Herbert Paris
Steven Pelletier
Liz Pierson
Jan Pierson
Debora Price
Richard Pulsifer
Carla Rensenbrink
Patricia Ryan
Christine Sloan
Jym St. Pierre
Steven Stern
Millie Stewart
Brooks Stoddard
Kathy Thorson
David Vail
Jan Wilk
Martin Wilk
Richard Wilson
Sarah Wolpow

STAFF
Angela Twitchell, *Executive Director*
Caroline Eliot, *Associate Director*
Chris Cabot, *Land Conservation & Farmland Protection Specialist*
Lee Cataldo, *Outreach & Education Coordinator*
Ellen Rodgers, *Financial & Administrative Manager*

June 20, 2016

Jared Woolston, Planner
Town of Brunswick
85 Union Street
Brunswick, ME 04011

Dear Jared:

The Brunswick-Topsham Land Trust (BTLT) is the fee owner of the Crystal Spring Farm property. In the interest of supporting local agriculture and the rural character of the Coastal Protection areas of Brunswick, the BTLT has entered into a long-term lease with Seth Kroeck and Maura Bannon to operate the farm. Seth and Maura have taken a leadership role in the proposed community solar electricity project on the farm by offering to be the site host. The farm also will be the principal beneficiary of the project.

Consequently Seth and Maura have entered into a host site lease with the prospective owners of the array, eight Brunswick families (including themselves), through a nonprofit association these families have formed to manage the project. This is the Crystal Spring Farm Community Solar Association. The solar array will be installed by ReVision Energy LLC.

The BTLT wholeheartedly supports this solar project and has signed the host site lease for the purpose of confirming its consent to this project. Therefore, as the record owner of the land we are pleased to further confirm our authorization for ReVision Energy LLC to apply for a special permit for this use. We note that as our lessee, Seth Kroeck and Maura Bannon control the use of the site, subject to the terms of the BTLT's lease with them. Clearly Seth and Maura support this project as (i) the participating member with the largest share of the array, and (ii) entering into the host site lease.

Please let me know if you have any questions. Thank you for your help on this great project.

Very truly yours,

Bradley O. Babson
President

CSF BTLT Letter to Brunswick Planner 6-17-16

108 Maine Street, Brunswick, ME 04011 / 207-729-7694 / info@btlt.org / www.btlt.org

ACCREDITED LAND TRUST ACCREDITATION COMMISSION

FSC® certified • SFI Fiber Sourcing certified • Made with Total Chlorine Free (TCF) and Elemental Chlorine Free (ECF) virgin fiber content • 10% post-consumer, Process Chlorine Free (PCF) and lignin-free fiber

Crystal Spring Farm Community Solar Association

Summary Project Description to Accompany Special Permit Application

Updated June 21, 2016

This is a summary description of a project to install a solar photovoltaic electricity array at Crystal Spring Farm. It is meant to accompany the Special Permit application for this project. This project is a cooperative initiative of Crystal Spring Farm, the Brunswick-Topsham Land Trust, and a group of Brunswick families who cannot install solar capacity where they live. This type of installation is called a community solar farm. It is a key project in the Solarize Brunswick effort. ReVision Energy is the installer.

The purpose of this overview is to give a brief description of the project, identify the key cooperating parties and note their respective roles, and summarize the objectives (and prospective benefits) of the project.

General Description

Physically, the project would be a ground-mounted, photovoltaic solar electricity generating system with a capacity of 75.79 kW (kilowatts). This is a small-scale electrical generating facility. The array would provide clean, renewable energy to Crystal Spring Farm and seven other Brunswick families. This is an all-Brunswick, leadership project, which has helped other Brunswick residents qualify for the maximize price discount for solar equipment under the Solarize Brunswick initiative.

In a community solar project like this, a group of electricity users in the same utility service area get together to build a single solar electricity generating facility, put all the power on the electrical grid, and get a credit for the power allocated to each participant via a meter at the solar array on his/her monthly electrical bill. This electricity transfer process is known as net metering. These are small-scale, distributed power projects, where the Maine Public Utilities Commission (PUC) limits the number of accounts that can use electricity from a community solar project to nine.

Each member of the participating group owns a different share of the array, sized to meet each member's electricity needs. The members form a nonprofit association, similar to a homeowners association, to manage the project.

In this case, the proprietors of Crystal Spring Farm, Seth Kroeck and Maura Bannon, are providing the site. As the largest electricity user, they also will own the largest share (44%) of the project. They have two CMP accounts, which count as two of the nine accounts allowed by the PUC. The other seven members will own shares ranging from 3-14% of the project. Kroeck/Bannon lease the farm property from the Brunswick-Topsham Land Trust (BTLT). The land trust is a consenting working partner in this project only.

Participants

The participants and their roles, therefore, are as follows:

- Seth Kroeck and Maura Bannon, the proprietors of Crystal Spring Farm, are offering the site and will own the largest share of the solar array.

- Legally, each of the participating members will own an undivided share in the total project, in accordance with each member's investment share and electricity needs. The members have formed the Crystal Spring Farm Community Solar Association, a nonprofit corporation to manage the project.

- Kroeck/Bannon have entered into a host site lease with the association, so the association (and its members) have the right to build and manage the project.

- Kroeck/Bannon have leased the farmland from the Brunswick-Topsham Land Trust, so as the fee owner of the land the BTLT has entered into the host site lease to consent to the project.

- ReVision Energy, LLC has been selected by the Town of Brunswick for the Solarize Brunswick initiative, and also by the members of the association, as the installer of the project.

- ReVision Energy will own the project during construction only. Upon completion of the project it will be turned over to the eight members of the association, each of whom will receive a Bill of Sale for his/her share of the project. As the owner during construction, ReVision Energy has applied for the Special Use permit, by mutual agreement, on behalf of the eventual owner/members, Crystal Spring Farm, and the BTLT.

- As noted, the association will manage the project once it is installed and accepted by its members. Thus the members, through the association, will be responsible for insurance, maintenance, and eventual removal of the project, at the end of its useful life. A list of association members is included in the supporting materials filed with the Special Permit application.

Project Physical Characteristics

A site plan, various schematics, and related drawings are included with the application. Please refer to these materials. The array will be located in pastureland at Crystal Spring Farm, on the south side of Pleasant Hill Road, near the intersection of Pleasant Hill Road and Woodside Road. The photovoltaic panels will be mounted two high in a portrait pattern on a steel racking system.

There will be no concrete or other foundation. The racking system will be attached to steel posts pile-driven into the ground to a depth of about five feet. There will be two rows, separated by about 18 feet. Each row will be about 240 feet long and about 10 feet high. The bottom edge of the panels will be about 3.5 feet off the ground, to facilitate mowing. The panels will be tilted at a 35 degree angle and face south (away from Pleasant Hill Road.) The connection from the array to a nearby power pole on Woodside Road will be underground. Although the solar panels will shed rain, there will be no impervious surface or access road associated with this installation.

There will be no moving parts, and limited maintenance associated with this installation. It will just sit there, quietly producing renewable energy from the sun for an estimated useful life of 30-40 years. The panels will not be shoveled in the winter. Since the panels will face away from Pleasant Hill Road, there will be no glare to distract travelers on this arterial.

The association plans to put some educational materials up about the project, either on the steel racking system or perhaps on a tasteful free-standing display. One purpose of the project is to provide educational materials about the virtues of solar energy and inspire others to convert to this clean, renewable source of electricity.

The array clearly will be associated with Crystal Spring Farm, as a model of how local agricultural producers can "go solar." The participants and the BTLT also are hopeful this may be a replicable model for other rural landowners and land trusts, and the educational materials will provide information of this nature.

Project Impacts and Benefits

The project will have near zero site and local environmental impacts. There will be no access road, no excavation or other ground work, no foundation, no noise, and no moving parts (i.e., this will be a fixed array). The farmland all around the array will be useable as pasture, and the array purposefully has been located to not take up any space on ground suitable for row crops.

The overall environmental impact is designed to be positive, although admittedly small due to the small scale of the project. The project will eliminate about 100,000 pounds per year of CO2 that would be produced from fossil fuel generation of this amount of electricity. This is meant to be a leadership project, showing the way toward a "greening" of agricultural and residential electricity use, with accompanying information about what kinds of actions are necessary to mitigate climate change and undertake similar projects.

To summarize some of the potential benefits:

- Support local agriculture in a high-visibility manner, pointing the way to the use of solar power on other farms.
- Lead in the conversion of Crystal Spring Farm to green power, plus the production and use of solar power for the other participants, who otherwise would not have access to it (demonstrate the utility of community solar projects).
- Provide an opportunity to educate people on the value of solar electricity and an example of how to obtain it.
- Fulfill broader community development and environmental educational objectives (e.g., neighbor cooperation and local, small-scale production of electricity).
- Facilitate the acquisition by land trusts of interests in land from landowners who may have an interest in solar electricity generation as a use of their land.
- Provide a leadership example of why it is important to have supportive public policies in Maine for the development of solar electrical energy.
- Be an anchor project to help others realize the full benefits of the Solarize Brunswick initiative.

SLW
Revised 6-21-16

Crystal Spring Farm Community Solar Association – Project Description
SCHEDULE C – Site Map

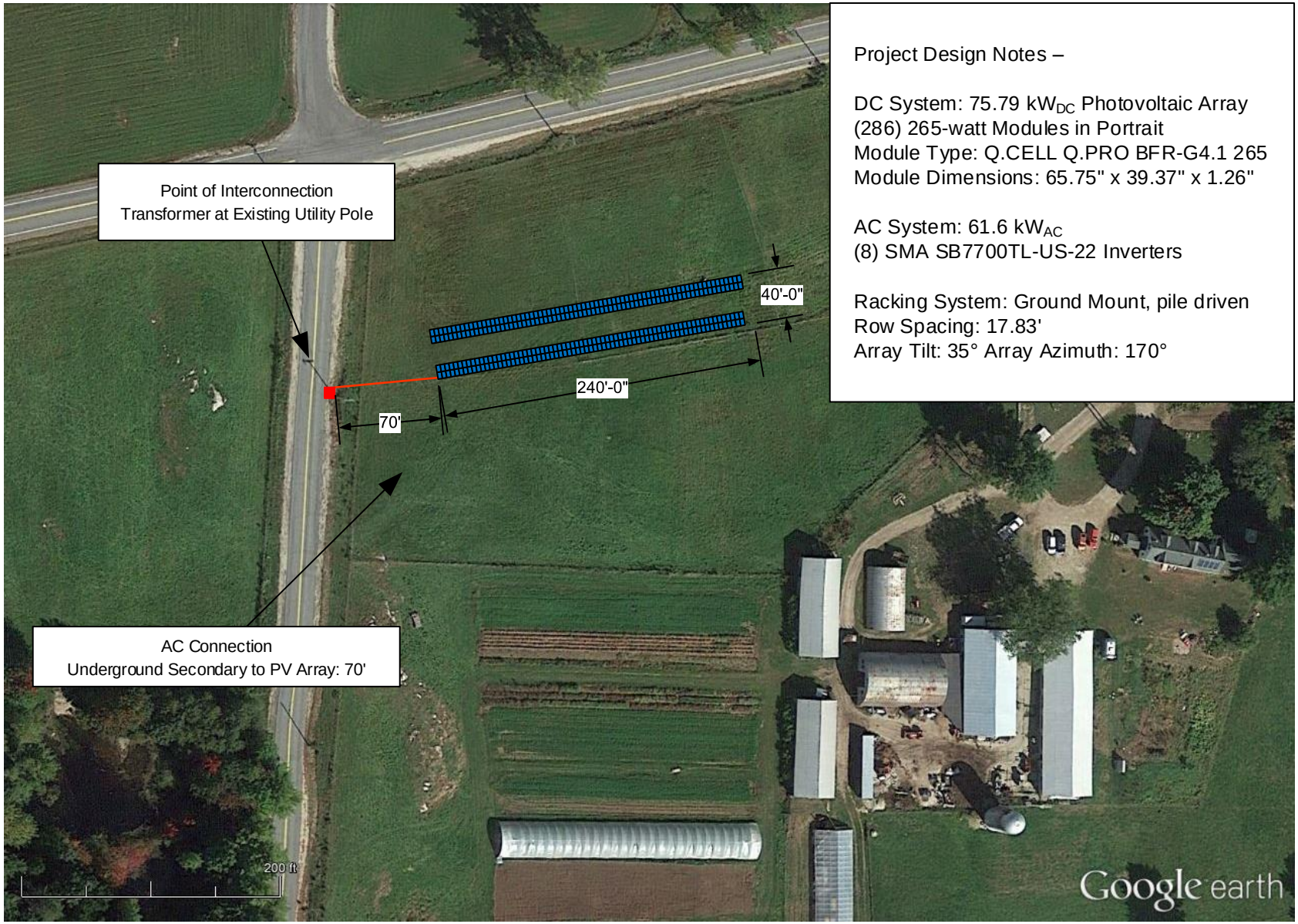

Project Design Notes –

DC System: 75.79 kW_{DC} Photovoltaic Array
(286) 265-watt Modules in Portrait
Module Type: Q.CELL Q.PRO BFR-G4.1 265
Module Dimensions: 65.75" x 39.37" x 1.26"

AC System: 61.6 kW_{AC}
(8) SMA SB7700TL-US-22 Inverters

Racking System: Ground Mount, pile driven
Row Spacing: 17.83'
Array Tilt: 35° Array Azimuth: 170°

142 Presumpscot Street
Portland, ME 04103
(207) 221-6342

Customer Name:

Crystal Spring Farm
277 Pleasant Hill Rd
Brunswick, ME 04011

System Type:

Photovoltaic Array

Designed by: LB

Date: February 23, 2016

SITE MAP

SHEET A01

© Copyright ReVision Energy

This diagram is provided as a service and is based on the understanding of the information supplied. It is subject to change based on actual conditions, applicable edition of the National Electric Code, and local governmental authorities.

Community Solar Farms

Cost-effective clean energy for your community

Technical Considerations for Community Solar Farm Sites

142 Presumpscot Street
Portland, ME 04103
(207) 221-6342

Project Information

Crystal Spring Farm
277 Pleasant Hill Rd
Brunswick, ME 04011

System Type:

Community Solar Farm,
Photovoltaic Array

Drawing Name:

Cover Page

Page:	1 of 8
Drawn By:	L. Brostek
Date:	August 13, 2015
Rev. Number:	0

Project Design Notes:

© Copyright ReVision Energy

This diagram is provided as a service and is based on the understanding of the information supplied. It is subject to change based on actual conditions, applicable edition of the National Electric Code, and local governmental authorities.

Professional Engineer Stamp of Approval:

Dimensions of Photovoltaic Array, Ground Mount Racking System, Side View:

Key Design Elements:
- South-facing (180° True)
- Array Tilt of 35°
- Leading Edge, 3'-6" from ground
- Driven Posts

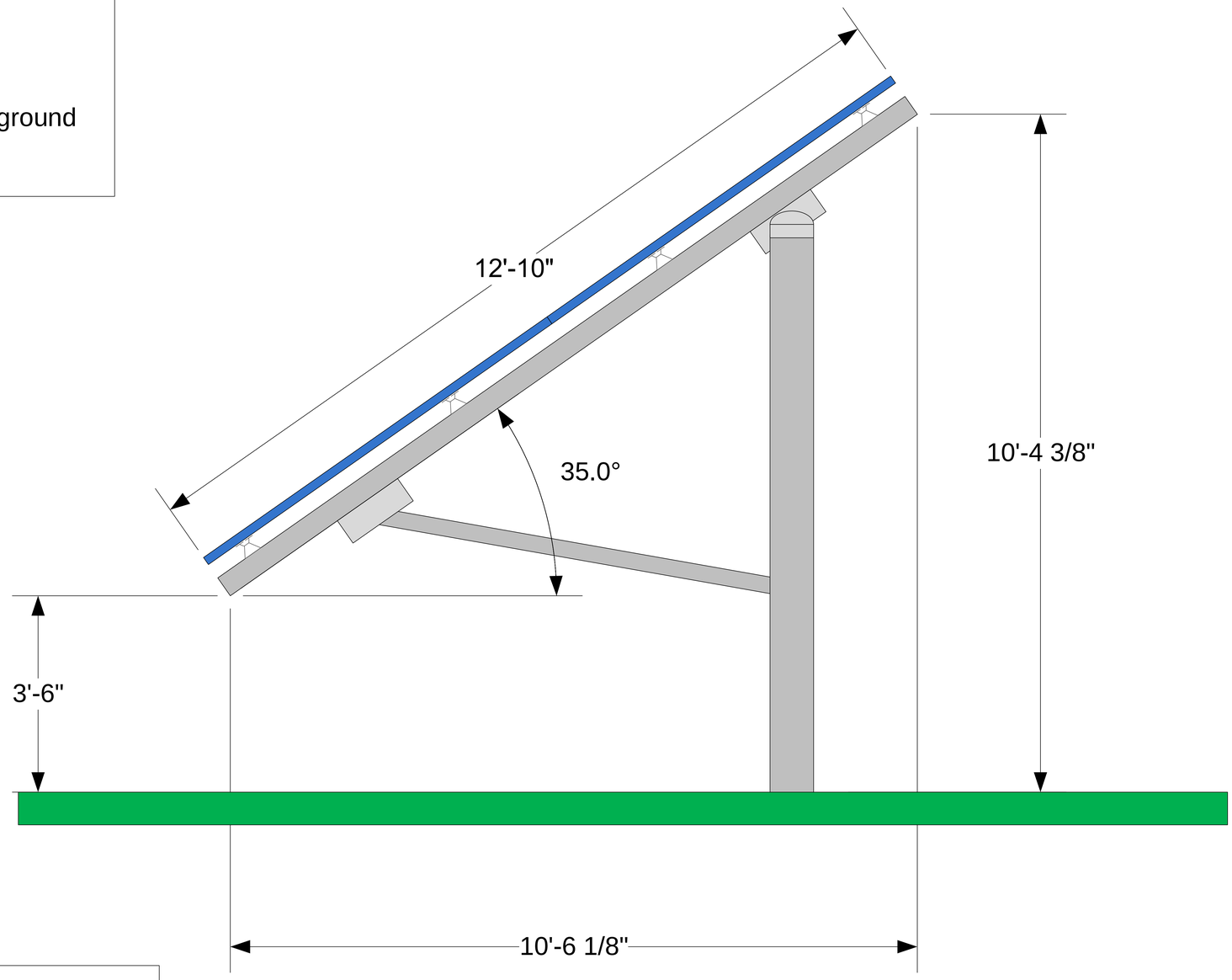

72-Cell Photovoltaic Module:
- ReneSola 310W
- Model No. JC310M-24/Ab
- Dimensions 77.01" x 39.06" x 1.57"

142 Presumpscot Street
Portland, ME 04103
(207) 221-6342

Project Information

Crystal Spring Farm
277 Pleasant Hill Rd
Brunswick, ME 04011

System Type:

Ground Mount Photovoltaic Array

Drawing Name:

Ground Mount Profile

Page:	6 of 8
Drawn By:	L. Brostek
Date:	August 13, 2015
Rev. Number:	0

Project Design Notes:

© Copyright ReVision Energy

This diagram is provided as a service and is based on the understanding of the information supplied. It is subject to change based on actual conditions, applicable edition of the National Electric Code, and local governmental authorities.

Professional Engineer Stamp of Approval:

Inter-row Spacing Requirement (Shadow Distance):

To eliminate shading during peak sun hours, distance between rows shall be a minimum of **17'-4"** from the top of the front panel to the bottom of the back panel. Shading calculations are based on the sun's position and altitude angle over New England on Winter Solstice (21 December).

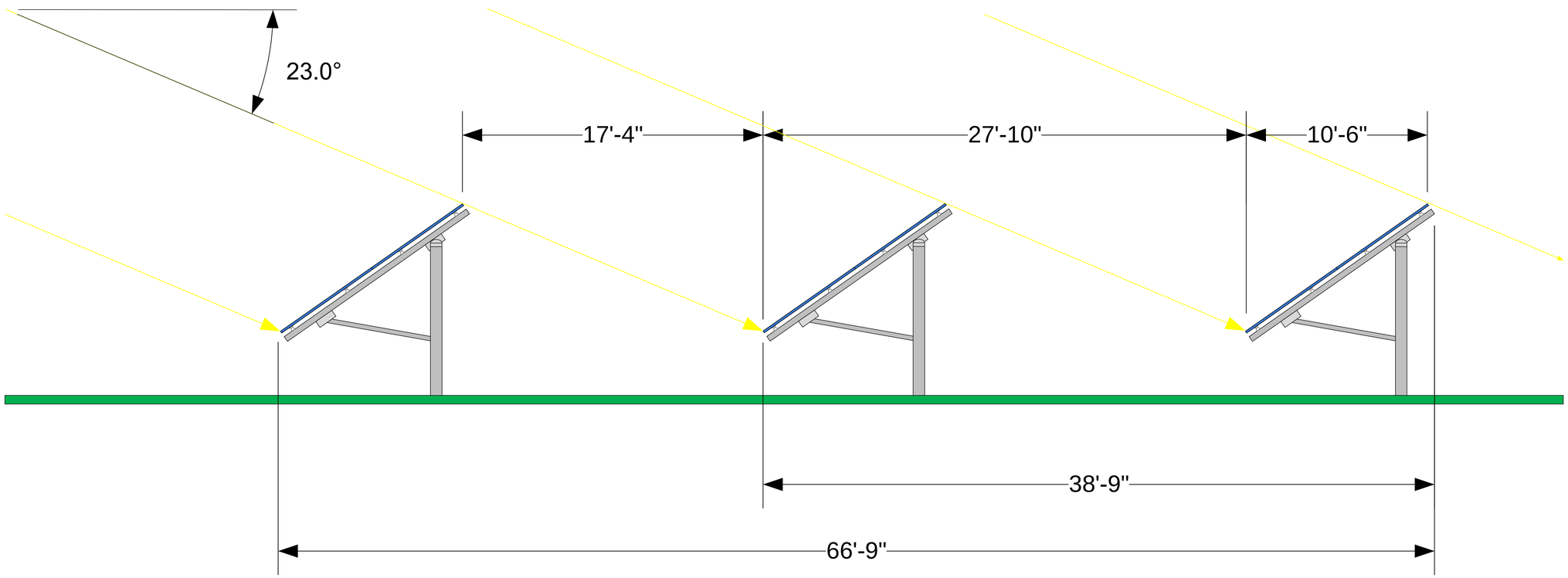

142 Presumpscot Street
Portland, ME 04103
(207) 221-6342

Project Information

Crystal Spring Farm
277 Pleasant Hill Rd
Brunswick, ME 04011

System Type:

Ground Mount Photovoltaic Array

Drawing Name:

Inter-Row Spacing

Page:	7 of 8
Drawn By:	L. Brostek
Date:	August 13, 2015
Rev. Number:	0

Project Design Notes:

© Copyright ReVision Energy

This diagram is provided as a service and is based on the understanding of the information supplied. It is subject to change based on actual conditions, applicable edition of the National Electric Code, and local governmental authorities.

Professional Engineer Stamp of Approval:

Professional design, installation and service of solar energy systems

Crystal Spring Farm Community Solar Association
Project Description

February 23, 2016

Schedule A: Membership Information

Schedule B: Scope of Work

Schedule C: Site Map

Schedule D: One Line Drawing

Schedule E: Projected 10-Year Budget

Schedule F: Helioscope Production Estimate

Schedule G: Manufacturer's Warranties

91 West Main Street
Liberty, ME 04949
(207) 589-4171

142 Presumpscot Street
Portland, ME 04103
(207) 221-6342

14 Dixon Ave
Concord, NH 03301
(603) 415-0151

7 Commercial Drive
Exeter, NH 03833
(603) 679-1777

www.ReVisionEnergy.com

Schedule A- Member Information Sheet
Crystal Spring Farm CSA

Name	Ownership Status	Name on CMP Bill	Address	CMP Account Number	Email	Phone	Pymt	kW	Share %	Share Price	Solarize Discount	Discounted Share Price
Seth Kroeck (& Maura Bannon) Pole/Barn	JWTROS	Seth D Kroeck	277 Pleasant Hill Road, Brunswick, ME 04011	514-033-0143-015	seth@crystalspringcsa.com	207-729-1112	Cash	24.640	32.510%	$97,715	$2,957	$94,758
Seth Kroeck (& Maura Bannon) Farmhouse	JWTROS	Seth D Kroeck	277 Pleasant Hill Road, Brunswick, ME 04011	514-045-7115-002	seth@crystalspringcsa.com	207-729-1112	Cash	8.733	11.523%	$34,633	$1,048	$33,585
Steven L Weems (& Susan)	JWTROS	Steven L Weems	44 Thompson Street, Brunswick, ME 04011	514-003-6183-014	slweems@gmail.com	207-729-7624	Cash	8.421	11.111%	$33,396	$1,011	$32,385
Thomas Rumpf (& Annee Tara)	JWTROS	Thomas A Rumpf	34 Belmont Street, Brunswick, ME 04011	514-003-4399-015	trumpf@tnc.org	207-725-1249	Cash	4.678	6.173%	$18,554	$561	$17,993
James & Jane Nichols-Ecker	JWTROS	James W Ecker	67 Simpson's Point Road, Brunswick, ME 04011	514-001-3642-012	jecker67@gmail.com	207-729-0926	Cash	4.990	6.584%	$19,790	$599	$19,191
David Vail (& June)	JWTROS	David Vail	1 Oakland Street, Brunswick, ME 04011	514-003-4897-015	dvail@bowdoin.edu	207-729-0879	Cash	2.495	3.292%	$9,895	$299	$9,596
Cathy Fogler (& Bruce Ketchum)	JWTROS	Catherine M Fogler	17 Barrows Street, Brunswick, ME 04011	514-003-6130-012	fogket@gmail.com	207-729-4275	Cash	4.367	5.761%	$17,317	$524	$16,793
Michael Cain (& Debra VamVikites)	JWTROS	Michael L Cain	321 Woodside Road, Brunswick, ME 04011	514-042-6649-003	mcain@bowdoin.edu	207-504-4594	Cash	14.347	18.930%	$56,897	$1,722	$55,175
Peter Simmons (& Charlotte Agell)	JWTROS	Peter J Simmons	39 Columbia Avenue, Brunswick, ME 04011	514-003-5621-018	peter@bowdoinfestival.org	207-729-4546	Cash	3.119	4.115%	$12,369	$374	$11,995
								75.790	100.000%	$300,566	$9,095	$291,471

Crystal Spring Farm Community Solar Association
Project Description
Schedule B: Scope of Work

Project Location: 277 Pleasant Hill Road, Brunswick, ME 04011 as shown on site map in Schedule C.
Size: 75.79 kilowatts (kW)
Estimated Electrical Generation: 101,574 kilowatt hours (kWh)

Scope of Work. The scope of work for this project shall include the following:

1.1 Solar Farm. ReVision Energy shall provide all labor, materials and equipment for the construction of the above-named Solar Farm, to include:

- (286) QCell 265-watt, photovoltaic modules, or equivalent with 12-year workmanship warranty and 25-year manufacturer's warranty;
- (8) SMA 7700TL-US inverter, or equivalent, with integrated utility disconnects and Revenue Grade Metering and 10-year manufacturer's warranty;
- Solar Log 350 & GE Meter, with 10-year data cellular plan and Solar Log Web Monitoring Services;
- Site preparation and clean up;
- All materials necessary to mount and wire the solar electric system. This includes all disconnects, fusing, and metering to meet both the National Electrical Code and the NABCEP certification;
- Professional installation by ReVision Energy's Master Electrician and NABCEP certified solar technicians;
- Copies of all warranties and product manuals;
- One-time training to one or more Solar Farm members to operate and monitor the system, and to review the measurement and allocation of energy credits by the local utility.

1.2 Utility Interconnection and Permitting. ReVision Energy shall be responsible for managing and fees for the utility interconnection, to include:

- Application to the local utility for installation of a new electrical meter;
- Installation of a new, stand-alone electrical service for the solar farm;
- Interconnection and impact fees required to interconnect the solar farm to the utility electric grid;

- Management of state and utility rebate applications and interconnection standards;
- Management of utility net energy billing application;
- Application fees for utility, state and local permits;

1.3 ReVision Warranty Coverage.

1.3.1 For a period of five (5) years following installation, ReVision Energy will repair, at no cost to the customer, equipment sold to the customer by ReVision Energy in accordance with the terms of the equipment manufacturer's warranty. Thereafter, ReVision Energy shall service warranties of manufacturers of equipment sold to the customer by ReVision Energy but the customer shall be responsible to pay the cost of ReVision Energy's labor.

1.3.2. For a period of five (5) years following installation, ReVision Energy warrants its workmanship supplied in connection with equipment purchased from, and installed by ReVision Energy. The customer shall pay the cost of ReVision Energy's labor to service or repair equipment purchased from a supplier other than ReVision Energy.

1.3.3. The customer shall be responsible to pay any costs other than labor to service or repair equipment installed by Revision Energy including, but not limited to, shipping charges in connection with parts that are not covered by the manufacturer's warranty.

1.3.4. The customer shall be responsible to pay all costs, including those for labor, equipment and materials, incurred by ReVision Energy to repair or service equipment purchased from us, but installed by others.

1.4 Exclusions. The following work shall be performed by others and shall be expressly excluded from the scope of work for this project:

- Fees associated with an energy audit that may be required in order to qualify for state rebate or other incentive programs;
- Repair or replacement of damaged existing site conditions;
- Framing, supporting or any structural upgrades to roof or building;
- Site work (including trenching) unless specifically outlined in scope of work.

Crystal Spring Farm Community Solar Association – Project Description
SCHEDULE C – Site Map

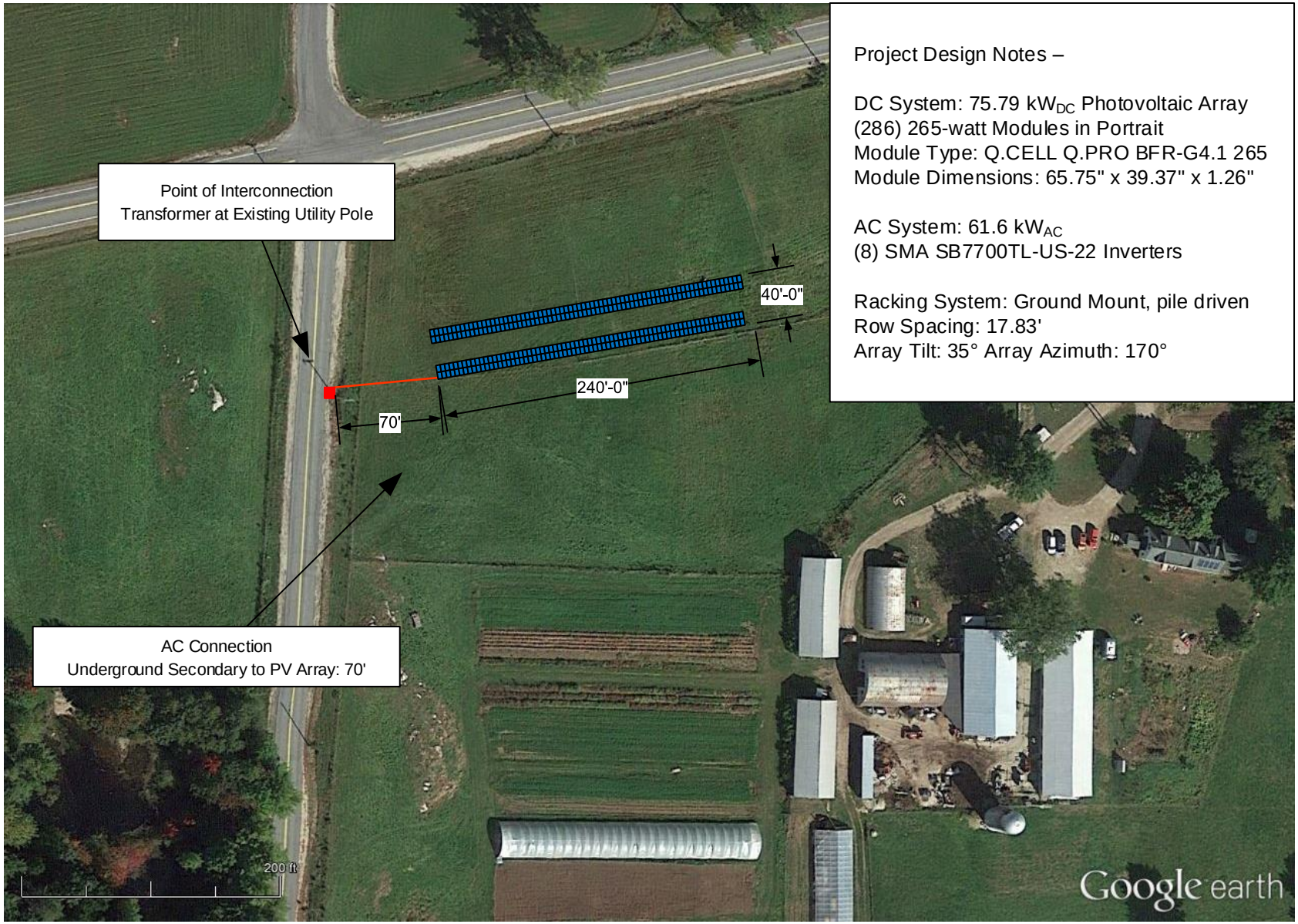

Project Design Notes –

DC System: 75.79 kW_{DC} Photovoltaic Array
(286) 265-watt Modules in Portrait
Module Type: Q.CELL Q.PRO BFR-G4.1 265
Module Dimensions: 65.75" x 39.37" x 1.26"

AC System: 61.6 kW_{AC}
(8) SMA SB7700TL-US-22 Inverters

Racking System: Ground Mount, pile driven
Row Spacing: 17.83'
Array Tilt: 35° Array Azimuth: 170°

142 Presumpscot Street
Portland, ME 04103
(207) 221-6342

Customer Name:

Crystal Spring Farm
277 Pleasant Hill Rd
Brunswick, ME 04011

System Type:

Photovoltaic Array

Designed by: LB

Date: February 23, 2016

SITE MAP

SHEET A01

© Copyright ReVision Energy

This diagram is provided as a service and is based on the understanding of the information supplied. It is subject to change based on actual conditions, applicable edition of the National Electric Code, and local governmental authorities.

Crystal Spring Farm Community Solar Association – Project Description
Schedule D – One-Line Diagram

Electrical Design Notes

- All conductors shall be copper unless specified otherwise.
- System-wide voltage drop shall not exceed 5%.
- Lowest expected ambient temperature is based on ASHRAE Extreme Min for the specified location.
- Average high temperature is based on ASHRAE 2% Avg. for the specified location.
- Point of Interconnection: New service at existing utility pole

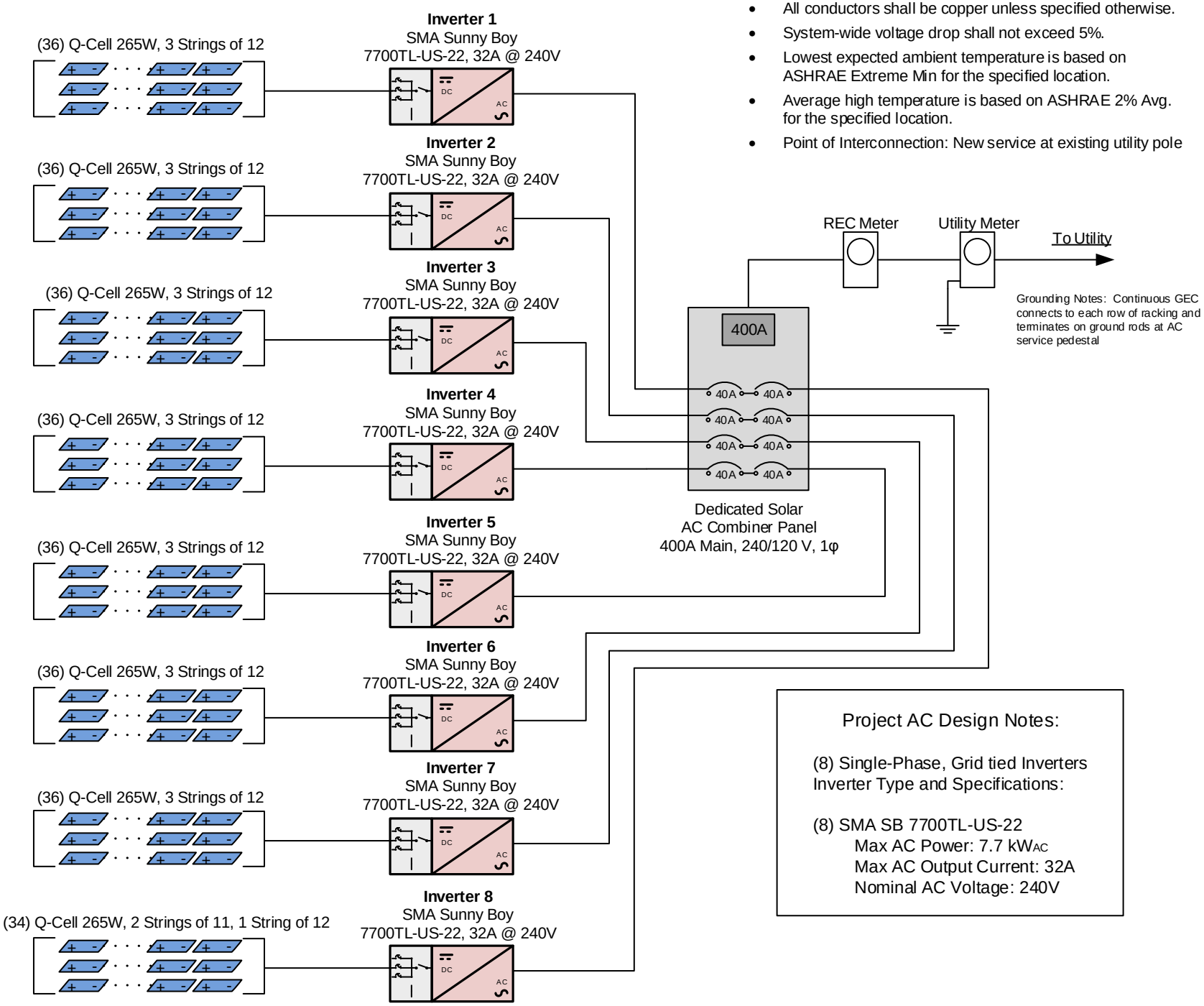

Project AC Design Notes:

(8) Single-Phase, Grid tied Inverters
Inverter Type and Specifications:

(8) SMA SB 7700TL-US-22
Max AC Power: 7.7 kW_{AC}
Max AC Output Current: 32A
Nominal AC Voltage: 240V

142 Presumpscot Street
Portland, ME 04103
(207) 221-6342

Customer Name:

Crystal Spring Farm
277 Pleasant Hill Rd
Brunswick, ME 04011

System Type:

75.79 kW_{DC}
Photovoltaic Array

Designed by: LB

Date: February 23, 2015

ONE-LINE DIAGRAM

SHEET E01

© Copyright ReVision Energy

This diagram is provided as a service and is based on the understanding of the information supplied. It is subject to change based on actual conditions, applicable edition of the National Electric Code, and local governmental authorities.

Crystal Spring Farm CSF

Project Description, Schedule E

Projected 10-Year Operating Budget

Project Parameters	
75.79	kW
101,574	kWh
1340.2	kWh/kW
0.50%	Derate Factor
10	# of Years RECs sold

Operating Budget	Rate Variable	Rate Fixed	CSF Total	$/1 kW Share	Projected Annual Budget per 1 kW/Share 1	2	3	4	5	6	7	8	9	10
INCOME														
REC Sales ($/MWH)	$ 30.00		$3,047	$40.21	$0.00	$40.21	$40.00	$39.80	$39.61	$39.41	$39.21	$39.01	$38.82	$38.63
(sale of RECs minted in Y1 become available in Y2, etc.)														
Total Income			**$3,047**	**$40.21**	**$0.00**	**$40.21**	**$40.00**	**$39.80**	**$39.61**	**$39.41**	**$39.21**	**$39.01**	**$38.82**	**$38.63**
EXPENSES														
Real Estate Property Tax	$ 360.00			$4.75	$4.75	$4.84	$4.94	$5.04	$5.14	$5.24	$5.35	$5.46	$5.57	$5.68
Real Estate Property Tax Escalator	2%													
Landowner lease payments ($/year)		$ 1.00	$1	$0.01	$0.01	$0.01	$0.01	$0.01	$0.01	$0.01	$0.01	$0.01	$0.01	$0.01
Insurance (general liability)		$ 1,000.00	$1,000	$13.19	$13.19	$13.19	$13.19	$13.19	$13.19	$13.19	$13.19	$13.19	$13.19	$13.19
Insurance (property)		$ 925.00	$925	$12.20	$12.20	$12.20	$12.20	$12.20	$12.20	$12.20	$12.20	$12.20	$12.20	$12.20
Electric Meter		$ 180.00	$180	$2.37	$2.37	$2.37	$2.37	$2.37	$2.37	$2.37	$2.37	$2.37	$2.37	$2.37
Registration Fees (ME Sec of State)		$ 40.00	$40	$0.53	$0.53	$0.53	$0.53	$0.53	$0.53	$0.53	$0.53	$0.53	$0.53	$0.53
Subtotal Expenses			**$2,146**	**$28.32**	**$33.07**	**$33.16**	**$33.26**	**$33.36**	**$33.46**	**$33.56**	**$33.66**	**$33.77**	**$33.88**	**$33.99**
Net Operating Budget			**$901**	**$11.89**	**$33.07**	**$7.05**	**$6.75**	**$6.45**	**$6.15**	**$5.85**	**$5.55**	**$5.24**	**$4.94**	**$4.63**
Cumulative						*$26.02*	*$13.79*	*$13.20*	*$12.60*	*$12.00*	*$11.39*	*$10.79*	*$10.18*	*$9.57*

OPTIONAL EXPENSES		Total	$/kW Share
Annual Inspection & Report		$ 400	$ 5.28
Director and Officer Insurance		$ 750	$ 9.90
Reserve Fund			
CSF Administration	Shop Rate ($75/hr in 2015)		
CSF Training (additional)	Shop Rate ($75/hr in 2015)		
Subtotal Optional Expenses		$ 1,150	$ 15.17

* REC prices subject to market variations.

Crystal Spring Farm CSA (75.79) Crystal Spring Farm CSF, 277 Pleasant Hill Rd Brunswick, ME 04011

Report

Project Name	Crystal Spring Farm CSF
Project Address	277 Pleasant Hill Rd Brunswick, ME 04011
Prepared By	Lukas Brostek luke@revisionenergy.com

System Metrics

Design	Crystal Spring Farm CSA (75.79)
Module DC Nameplate	75.8 kW
Inverter AC Nameplate	61.0 kW Load Ratio: 1.24
Annual Production	101.6 MWh
Performance Ratio	78.4%
kWh/kWp	1,340.2
Weather Dataset	TMY, PORTLAND, NSRDB (tmy2)
Simulator Version	153 (443094f0ad-ea93f843ef-fce6caf820-00aa14f623)

Field Segments

Monthly Production

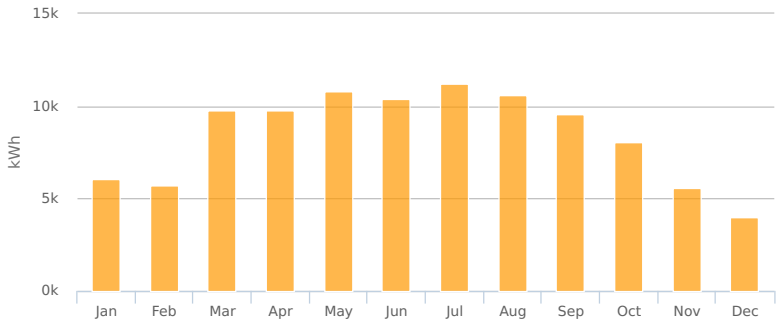

Month	kWh
January	6,027.3
February	5,720.3
March	9,793.8
April	9,795.3
May	10,814.3
June	10,369.4
July	11,235.0
August	10,604.7
September	9,556.6
October	8,083.8
November	5,592.1
December	3,978.3

Sources of System Loss

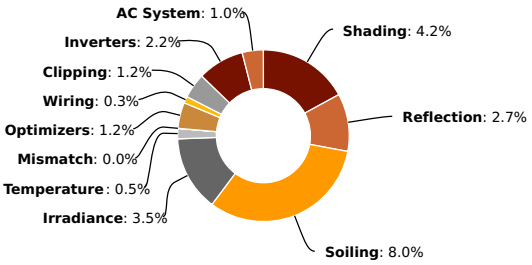

Annual Production

	Description	Output	% Delta
Irradiance (kWh/m²)	Annual Global Horizontal Irradiance	1,440.9	
	POA Irradiance	1,708.3	18.6%
	Shaded Irradiance	1,636.4	-4.2%
	Irradiance after Reflection	1,592.5	-2.7%
	Irradiance after Soiling	1,465.7	-8.0%
	Total Collector Irradiance	**1,465.7**	**0.0%**
Energy (kWh)	Nameplate	112,159.2	
	Output at Irradiance Levels	108,235.8	-3.5%
	Output at Cell Temperature Derate	107,711.5	-0.5%
	Output After Mismatch	107,711.4	0.0%
	Optimizer Output	106,410.6	-1.2%
	Optimal DC Output	106,083.6	-0.3%
	Constrained DC Output	104,845.4	-1.2%
	Inverter Output	102,581.0	-2.2%
	Energy to Grid	**101,571.0**	**-1.0%**
Temperature Metrics			
	Avg. Operating Ambient Temp	10.7 °C	
	Avg. Operating Cell Temp	17.7 °C	
Simulation Metrics			
	Operating Hours	4719	
	Solved Hours	4719	

Condition Set

Description	Condition Set
Weather Dataset	TMY, PORTLAND, NSRDB (tmy2)
Solar Angle Location	Meteo Lat/Lng
Transposition Model	Perez Model
Horizon Profile	Resource Conservation CSF - Horizon File.hor
Temperature Model	Sandia Model

Temperature Model Parameters

Rack Type	a	b	Temperature Delta
Fixed Tilt	-3.56	-0.075	3°C
Flush Mount	-2.81	-0.0455	0°C

Soiling (%)

J	F	M	A	M	J	J	A	S	O	N	D
14.4	31.5	4.5	4.5	4.5	4.5	4.5	4.5	4.5	4.5	4.5	26.1

Irradiation Variance	5%
Cell Temperature Spread	4° C
Module Binning Range	-2.5% to 2.5%
AC System Derate	3.00%

Module Characterizations

Module	Characterization
Q.PRO BFR-G3 265 (2015) (Hanwha Q Cells)	Default Characterization, PAN

Component Characterizations

Device	Characterization
SE7600A-US (240V) (SolarEdge)	Default Characterization
P300 (SolarEdge)	Mfg Spec Sheet

Components

Component	Name	Count
Inverter	SE7600A-US (240V) (SolarEdge)	8 (61.0 kW)
AC Panel	8 input Panel	1
Combiner	1 pole Combiner	8
Combiner	3 pole Combiner	8
AC Home Run	6 AWG (Copper)	8 (954.8 ft)
AC Home Run	4/0 AWG (Copper)	1 (170.6 ft)
Strings	10 AWG (Copper)	24 (4,313.2 ft)
Optimizers	P300 (SolarEdge)	286
Module	Q.PRO BFR-G3 265 (2015) (Hanwha Q Cells)	286

Wiring Zones

Description	Combiner Poles	String Size	Stringing Strategy
Wiring Zone	4	12	Along Racking

Field Segments

Description	Racking	Orientation	Tilt	Azimuth	Intrarow Spacing	Frame Size	Frames	Modules
Field Segment 2	Fixed Tilt	Vertical (Portrait)	35°	170°	17.8 ft	2x1	143	286

Detailed Layout

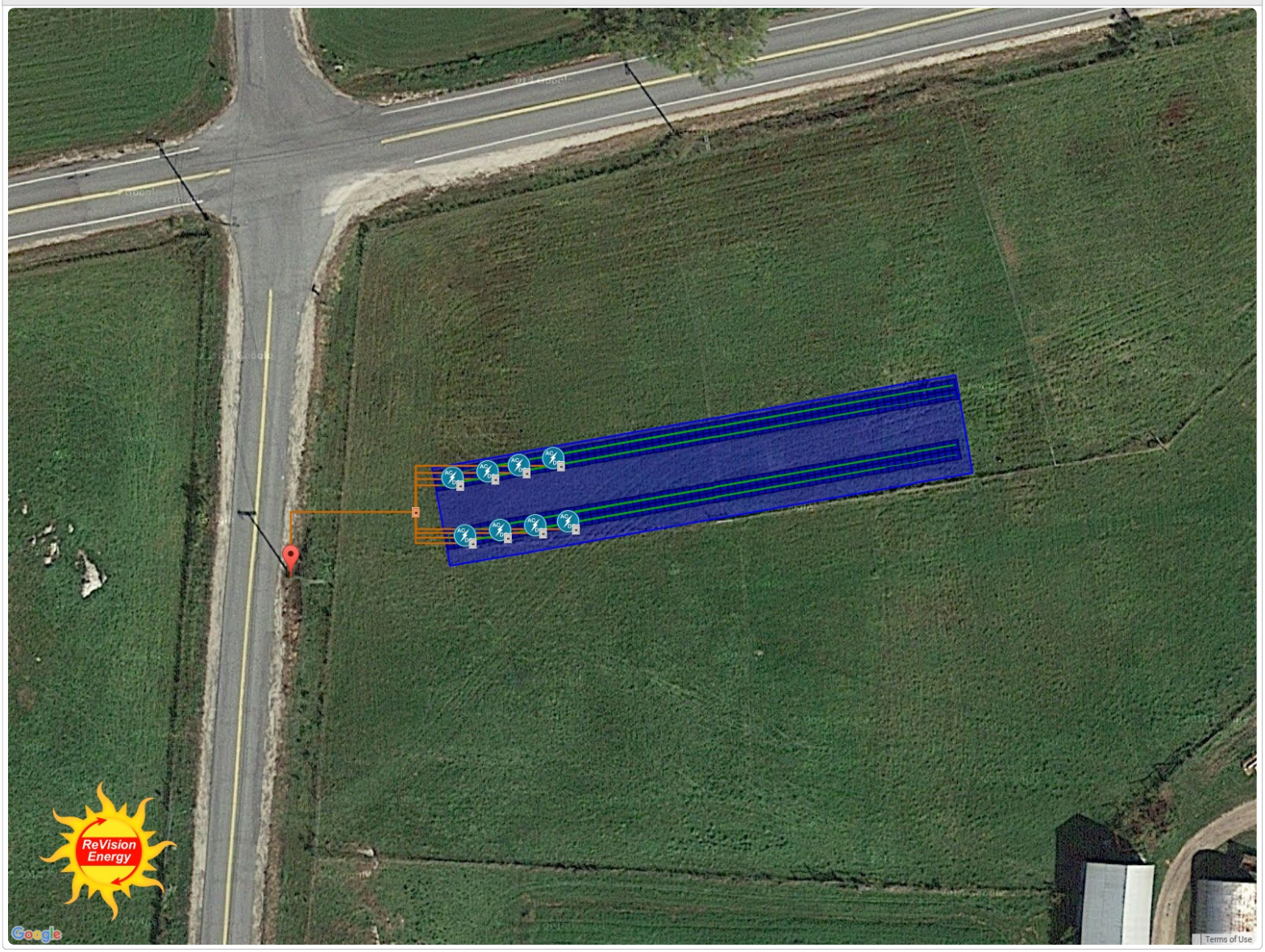

Crystal Spring Farm Community Solar Association
Site Lease Agreement

This Site Lease Agreement ("**Agreement**") is made and entered into by Crystal Spring Farm Community Solar Association (hereinafter the "Association"), and Seth Kroeck and Maura Bannon, collectively the "Host" listed below, each of which may be referred to herein individually as a "Party" or collectively as the "Parties." The Host has leased land on which a solar photovoltaic electric generation property (the "**System**") will be located from the Brunswick-Topsham Land Trust ("BTLT" or the "Trust"), which is consenting to the Host to enter into this Agreement pursuant to its lease with the Host.

Association	Crystal Spring Farm Community Solar Association 44 Thompson Street, Brunswick, ME 04011		Host	Seth Kroeck and Maura Bannon 277 Pleasant Hill Road Brunswick, Maine 04011

ASSOCIATION MEMBERSHIP
The members of Crystal Spring Farm Community Solar Association are listed in the attached Exhibit A.

SITE
The Site is described in the attached Exhibit B.

NOTICES
Except as otherwise provided for herein, all notices or other communications under this Agreement shall be delivered pursuant to Section 13 and shall be addressed as follows:

Association Contact	Steven Weems		Host Contact	Seth Kroeck
Phone	207-725-7282		Phone	207-729-1112
Email	slweems@gmail.com		Email	seth@crystalspringcsa.com
Address	44 Thompson Street		Address	277 Pleasant Hill Road
	Brunswick, ME 04011			Brunswick, Maine 04011

RECITALS

Host is the lessee, pursuant to a long-term ground lease with the Trust, of certain real property referenced above (the "**Site**").

The Association wishes to (i) enable its Members to install, own, access, operate, maintain, repair, replace, and dispose of a solar photovoltaic electric generation property (the "**System**"), and control the growth of vegetation impacting the performance of the System, which System will be located on a portion of the Site for the purpose of generating electricity for use by the Members of the Association pursuant to a separate Net Energy Billing Contract between the Association and the UTILITY (the "**NEB Contract**"), and (ii) perform all of the Association's obligations set forth in the NEB Contract and (iii) to enforce all of Association's rights set forth in the NEB Contract (the "**Purpose**").

Host desires to make a portion of the Site available to the Association for this Purpose.

NOW, THEREFORE, in consideration of the mutual representations, warranties and covenants contained in this Agreement, the sufficiency and adequacy of which are hereby acknowledged, the Parties agree to the following:

1. Lease. Host does hereby lease the above described Site for the Term defined in Section 2 to the Association and to the Association's agents, employees and contractors. Host provides an irrevocable, non-exclusive lease to access and use certain portions of the Site described above for the Purpose and to the extent that others have access and use of the Site, Host warrants that such access and use shall not adversely or materially affect the Association's rights. The Association may record a memorandum of this Agreement.

2. Term, Renewal and Removal. The Parties' rights and obligations under this Agreement are expressly conditioned upon the full execution of the NEB Contract and shall commence on the Effective Date of the NEB Contract. The initial term of this Agreement shall be thirty (30) years.

   (a) Renewal. As long as the Association is not in default under this Lease beyond the applicable cure period, if any, at the time of the exercise, Host hereby grants the Association two (2) options to extend the initial term of this lease for an additional period of five years each (the "Options") on the same terms, covenants, and conditions of this Lease. The Association will exercise each Option, if at all, by giving the Host written notice (the "Option Notice") at least ninety (90 days) before the expiration of the Initial Term, or Option period then in effect. The initial term and all renewal terms are referred to herein as the "**Term**."

   (b) Holdover. Any holding over by the Association beyond the Term is prohibited without the prior written approval of the Host. Upon expiration of this lease at the end of the Term or if the Association fails to give the notice required by Section 2(a) above, if the Host and Association are unable to agree upon the terms of a new lease, then the provisions of Section 2(c) below regarding removal shall apply. If the Association is obligated under this section to remove the System and fails to do so within the time prescribed, then the Association shall be in default and the Host, after notice of default and expiration of the applicable cure periods set forth in Section 10(a) below, may remove the System at the Association's cost.

   (c) Removal. Upon termination of this lease, the Association shall cause its members to remove the System and return the Property to Host in substantially the same condition as it existed prior to construction, except that the Association shall not be required to remove any equipment or improvements located underground. Such removal shall be completed within ninety (90) days following the expiration of the Term of this lease, during which time the Association shall be subject to all terms and conditions in this Lease with respect to access and said removal as if still a tenant.

3. Consideration. The Association agrees to pay Host an annual lease fee as specified in Exhibit C attached hereto.

4. Access. Host represents and warrants that the Site is accessible via public streets and existing drive over land of Landowner. Host hereby grants Association, its agents, employees and assigns, easements over, across, and through the Site for the Purpose, including, but not limited to, an easement for pedestrian and vehicular access the site from the public street and an easement to install, maintain, repair and replace such above and below ground utility lines and conduits as are reasonably necessary to achieve the Purpose. Host also acknowledges the System has broad agricultural farm benefits, plus additional community leadership and educational purposes, and reasonable access to the Site to fulfill these purposes shall be permitted. Notwithstanding its access rights to the Site, the Association agrees that it shall not otherwise unreasonably interfere with the use of the Property by the Host or the Trust.

   (a) Coordination of Access. Association's activities shall not unreasonably interfere with Host's and Trust's normal business activities, which include, but are not limited to, haying and farming related activity and the Parties will cooperate to establish reasonable policies and procedures to coordinate ongoing maintenance, repair and operation of the System required under the NEB Contract.

   (b) Solar Access. Host understands that unobstructed access to sunlight ("**Insolation**") is essential to Association's performance of its obligations and a material term of this Agreement. Host shall not in any way cause and, where possible, shall not in any way permit any interference with the System's Insolation.

5. System Ownership. The Association Members are the legal and beneficial owners of the System. The System shall at all times retain the legal status of personal property as defined under Article 9 of the Uniform Commercial Code, and shall not be deemed a part of, or fixture to, the Site. Host agrees that Association has the right to file a UCC-1 financing statement, a fixture filing or any other form of notice permitted by Law in the jurisdiction where the System is located confirming that Association owns the System. Host, as lessee of the Site, will obtain any necessary consent from the owner and confirm receipt of consent upon request of the Association.

6. System & Site Maintenance. The Association shall be responsible for maintenance of the solar equipment, including but not limited to the solar panels and their support structure, the inverter, the underground connection to the electricity grid, and related equipment. The Host shall be responsible for mowing around the System and maintaining reasonable access to it.

7. Estoppel and Subordination.

   (a) Estoppel. Host and Association each agree, within ten (10) days after a request by the other Party, to execute and deliver to the requesting party a statement, in writing, certifying (if such be the case) (i) that this Agreement is in full force and effect, (ii) the date of commencement of the Term, (iii) that there are no uncured defaults by the other Party or, if such defaults are claimed, stating the facts giving rise thereto, (iv) the Association and/or its members own the solar array as personal property and (v) other similar matters as may be reasonably requested by the other Party or its financing party, mortgagees or prospective mortgagees.

   (b) Subordination. Host represents to Association that the Site is not subject to any mortgages, deeds of trust, other security instruments conditions or restrictions (collectively, "**Superior Interests**") *other than those Host disclosed in writing prior to the Effective Date of this* Agreement. If Host desires to subject the Site to a Superior Interest after the Effective Date of this Agreement, Host shall notify the Association in advance in writing and shall obtain a non-disturbance agreement reasonably satisfactory to the Association from the holder of any such Superior Interest that shall provide that, in the event of any proceedings brought for the enforcement of any Superior Interest, the Association shall, upon demand by the Superior Interest holder but subject to the Association's rights of non-disturbance, attorn to and recognize such Superior Interest holder as Host under this Agreement. The Association acknowledges that this Agreement is subordinate to the Host's long-term ground lease and that the Agreement shall be subject to the terms and conditions of, and interpreted consistently with, the Host's long-term ground lease and any conflict in interpreting the terms of the two leases shall be resolved in favor of the underlying long-term ground lease.

7. Indemnification. To the fullest extent permitted by law, Host shall indemnify, defend, protect, save and hold harmless the Association, the Association's financing parties, and their respective affiliates, employees, officers, directors, members, partners, shareholders, agents, successors and assigns (the "**Association Parties**") from any and all third party claims, actions, costs, expenses (including reasonable attorneys' fees and expenses), damages, liabilities, penalties, losses, obligations, injuries, demands and liens of any kind or nature arising out of, connected with, relating to or resulting from (i) Host or Host's agents', representatives', vendors' or employees' actions, negligence, or willful misconduct or (ii) Host's failure to comply with any of the terms of this Agreement; provided, that nothing herein shall require Host to indemnify Association for its own gross negligence or willful misconduct. The provisions of this paragraph shall survive the termination or expiration of this Agreement.

8. Environmental Indemnification. Association is not liable for any past, present or future contamination or pollution or breach of environmental laws, if any, relating to the Site and the land beneath the Site. Accordingly, to the fullest extent permitted by law, Host agrees to assume full responsibility for and shall indemnify, defend and hold harmless the Association Parties from any and all liability or cleanup obligations for any contamination or pollution or breach of environmental laws related to the Site and the land below the Site, except to the extent deposited, spilled or otherwise directly caused by Association of any of its contractors or agents. The provisions of this paragraph shall survive the termination or expiration of this Agreement.

9. Limitation of Liability. WITH THE EXCEPTION OF THIRD PARTY CLAIMS ARISING UNDER SECTION 7, ANY CLAIMS ARISING UNDER SECTION 7 AND ANY CLAIM BASED ON THE FRAUD OR WILLFUL MISCONDUCT OF EITHER PARTY, NEITHER PARTY SHALL BE LIABLE TO THE OTHER FOR ANY INDIRECT OR PUNITIVE DAMAGES OF ANY CHARACTER, RESULTING FROM, ARISING OUT OF, IN CONNECTION WITH OR IN ANY WAY INCIDENT TO ANY ACT OR OMISSION OF EITHER PARTY RELATED TO THE PROVISIONS OF THIS AGREEMENT, IRRESPECTIVE OF WHETHER CLAIMS OR ACTIONS FOR SUCH DAMAGES ARE BASED UPON CONTRACT, WARRANTY, NEGLIGENCE (EXCEPT GROSS NEGLIGENCE), STRICT LIABILITY OR ANY OTHER THEORY AT LAW OR EQUITY.

10. Default. The occurrence of any of the following shall be an event of default under this Agreement (each, an "**Event of Default**"):

    (a) Failure to Perform Material Obligations. Failure of a Party to perform any material obligation under this Agreement and such failure continues for a period of fifteen (15) days from such Party's receipt of written notice from the other Party; provided, however, that if such failure to perform a material obligation is not capable of being cured within fifteen (15) days from receipt of written notice, then such period shall be extended, provided that the defaulting Party commences to cure such failure within thirty (30) days and thereafter diligently continues to cure such failure to completion.

    (b) Property Rights of Host. Host loses its right to occupy and use any portion of the Site and which the Association determines materially affects its property interest and intended purpose.

    (c) Default. The Association is in default under the NEB CONTRACT, after the expiration of any applicable notice periods and cure rights, if any.

    (d) Unauthorized Transfer by Host. Host assigns or transfers its rights and obligations under this Agreement in violation of s.12(a).

    (e) Bankruptcy Event. Either Party becomes insolvent or is a party to a bankruptcy, reorganization, insolvency, liquidation, receivership, dissolution, winding-up or relief of debtors, or any general assignment for the benefit of creditors or other similar arrangement or any event occurs or proceedings are taken in any jurisdiction with respect to the Party which has a similar effect.

    (f) Subordination. Host fails to comply with Section 6(b) of this Agreement.

11. Remedies. Upon the occurrence of an Event of Default by a Party, and the expiration of any applicable cure and notice periods, the non-defaulting Party may terminate this Agreement by providing written notice to the defaulting Party. Other than those damages exempted under Section 9, the prevailing party shall be entitled to recover any damages accruing as a result of default, including attorney fees and costs.

12. Assignment.

    (a) Assignment by Host. Host may not assign or transfer its rights and obligations under this Agreement without the Association's prior, written consent except for any transfer to a successor farmer of CSF or BTLT pursuant to the bylaws of the Association.

    (b) Assignment by Association. At any time during the Term of this Agreement the Association may sublease or license its rights hereunder to its Members without Host's consent or prior notice to Host. Any other assignment or sublease shall not be permitted without the prior written consent of the Host, which consent shall not be unreasonably withheld, delayed or conditioned.

    (c) Collateral Assignment by Association. The Association may, at any time during the term of this Agreement, without Host's consent and without having to provide notice to Host, mortgage, pledge or otherwise collaterally assign its interests in this Agreement and the System to a Financing Party (and in connection therewith, upon request, Host shall execute and deliver to Financing Party a consent to collateral assignment agreement or similar agreement); provided, however, that any such collateral assignee shall not be obligated to assume Association's obligations under this Agreement unless and until such collateral assignee shall foreclose or otherwise realize Association's obligations upon such collateral assignment; provided, further,

that any such assignment shall be subject to the terms of such consent to collateral assignment agreement.

13. Notices. Except as otherwise provided for herein, all notices or other communications under this Agreement shall be in writing and shall be delivered by (i) hand, or (ii) first-class mail, or (iii) recognized express courier, or (iv) email message, addressed as set forth on page 1 of this Agreement.

14. Voluntary Relocation by Host. Host, at Host's sole expense, shall have the right to cause the Facility to be relocated to a different location on the Site or at a different site altogether reasonably acceptable to the Association. Host shall be solely responsible to pay all capital and operating expenses, including any required recapture or repayment of renewable energy incentives and any lost revenues or energy during the period the system is inoperative, incurred to relocate the system pursuant to this Section. Any replacement system shall be designed to meet the requirements for shared ownership net metering, and shall produce at least as many kilowatt hours per year as the Facility it replaces.

15. Insurance Coverage. At all times during the Term, the Association shall maintain commercial general liability insurance with coverage of at least $1,000,000 per occurrence and $2,000,000 annual aggregate. The Association shall name Host and Trust as additional named insureds on the Association's liability insurance for the Facility.

16. Real Estate Property Taxes. The Parties acknowledge the Site currently is taxed by the Town of Brunswick as farmland, and will be reclassified to facilitate this project. The Association shall be responsible for any increase in real estate taxes on the underlying ground covered by this Agreement, above and beyond the taxes that would have been incurred by the Host (and the Trust) under the farmland classification. This shall include but not be limited to any taxes, interest and penalties associated with the reclassification of the Site and on-going incremental taxes levied as a result of this reclassification.

17. Miscellaneous.

    (a) Quiet Enjoyment. Host covenants and agrees that Association shall quietly enjoy the exercise of its rights hereunder without hindrance, disturbance or molestation from Host or any person claiming under Host

    (b) Governing Law. The Laws of the state of Maine shall govern this Agreement without giving effect to conflict or choice of laws principles.

    (c) Arbitration. The Parties shall attempt to amicably resolve any disputes arising from or relating to this Agreement. If the Parties are unable to amicably resolve a dispute within fifteen (15) days after the dispute arises, either Party may commence binding arbitration proceedings with the American Arbitration Association to be held in Portland, Maine. Judgment on an arbitrator's award may be entered in any court of competent jurisdiction. The prevailing party in any dispute arising out of this Agreement shall be entitled to reasonable attorneys' fees and costs. THE ARBITRATOR'S DECISION WILL BE FINAL AND BINDING, EXCEPT TO THE EXTENT IT IS SUBJECT TO REVIEW IN ACCORDANCE WITH APPLICABLE LAW GOVERNING ARBITRATION AWARDS.

    (d) No Waiver. Any failure of any Party to enforce any of the provisions of this Agreement or to require compliance with any of its terms at any time during the pendency of this Agreement shall in no way affect the validity of this Agreement, or any part hereof, and shall not be deemed a waiver of the right of such Party thereafter to enforce such provisions or require compliance with such terms.

    (e) No Liens. Host shall not suffer or permit the System to become subject to any lien, security interest or encumbrance for debt of any kind that may be owed by or demanded of Host.

    (f) Amendments. No change, amendment or modification of this Agreement shall be valid or binding upon the Parties hereto unless such change, amendment or modification shall be in writing and duly executed by both Parties.

(g) Entire Agreement. This Agreement contains the entire understanding of the Parties with respect to the subject matter hereof and supersedes any and all prior agreements and commitments with respect thereto. There are no oral or written understandings, terms or conditions, and neither Party has relied upon any representation, express or implied, not contained in this Agreement

(h) Counterparts. This Agreement may be signed in any number of counterparts and each counterpart shall represent a fully executed original as if signed by both Parties

(i) Severability. Any term or provision of this Agreement that is or becomes invalid or unenforceable in any situation in any jurisdiction shall not affect the validity or enforceability of the remaining term and provisions of this Agreement or the validity or enforceability of the offending term or provision in any other situation or in any other jurisdiction

(j) No Third Party Beneficiaries. Nothing in this Agreement shall provide any benefit to any third party (other than a Financing Party as set forth herein) or entitle any third party to any claim, cause of action, remedy or right of any kind.

(k) Survival. The provisions of this Agreement which by their nature are intended to survive the termination, cancellation, completion or expiration of this Agreement, including any express limitations of or releases from liability, shall continue as a valid and enforceable obligation of the Party notwithstanding any such termination, cancellation, completion or expiration.

(l) Successors and Assigns. Except as otherwise prescribed herein, this Agreement shall be binding upon and shall inure to the benefit of the Parties hereto and their permitted successors and assigns.

IN WITNESS WHEREOF, the Parties have executed this Agreement effective as of the date that the last Party signs this Agreement (the "**Effective Date**").

CRYSTAL SPRING FARM COMMUNITY SOLAR ASSOCIATION			SETH KROECK & MAURA BANNON	
Signature	STEVEN L WEEMS		Signature	SETH SETH KROECK MBannon Maura Bannon
Title President, CSF CSA	President CSFCSA		Title	Host
Date	April 20, 2016		Date	April 20, 2016

The Brunswick-Topsham Land Trust hereby joins in this Agreement for the sole purpose of confirming its consent to the Agreement as Owner of the Site and Landlord under the long term ground lease with Host and to acknowledge it will provide written notice to the Association in the event of any material default by Host arising under the long term ground lease which affects the Association's rights hereunder.

Brunswick-Topsham Land Trust

By: BRADLEY O. BABSON
Its: PRESIDENT

Exhibit A
Membership List of the
CRYSTAL SPRING FARM COMMUNITY SOLAR ASSOCIATION

Name:
Address:
Utility Account #
Percent Ownership:
Estimated Capacity (kW) and Annual Electrical Production (kWh)

Exhibit B
Property Description, System Location and System Design

Section B.01. Insert description of property, using description from Host's Deed

Section B.02. Insert description of system, to include Site Map, One Line Diagram, and Project Description

Exhibit C
Lease Payments

Section C.01. LEASE PAYMENTS

The Lease Payments to be paid by the Association to Host shall include the following compensation:

(1) Annual Lease Payments: The Annual Lease Payments to be paid by the Association to Host shall be $ 1.00.

(2) Billing: Lease Payments shall be payable annually and shall be due and payable by the Association to Host on or before thirty (30) days after the beginning of commercial operations of the System, and the annual anniversary of the commercial operations date thereafter. Host may charge a late fee equal to 1% of the amount due from the Association during any month or any fraction thereof that a Lease Payment is late.