TOWN OF BRUNSWICK

STAFF REVIEW COMMITTEE

STAFF REVIEW COMMITTEE
- AGENDA -
BRUNSWICK TOWN HALL
85 UNION STREET
ROOM 206
WEDNESDAY, JULY 13, 2016, 10:00 A.M.

1. **Case #16-025 Crystal Springs Farm Community Solar Farm:** The Committee will review and provide a recommendation to the Planning Board on a **Special Permit** application for a proposed community solar farm within an existing agricultural field. The proposed use is located in the **Coastal Protection 1 (CP1) Zoning District; and Natural Resource Protection Zone (NRPZ) (Map 21, Lot 16).**

2. **Case #16-031 Tao Yuan Greenhouse and Café:** The Committee will review and provide a recommendation to the Planning Board on a **Major Development Review Amendment** application for a new two-story building for a greenhouse, café and administrative space. The proposed use is located in the **Town Center 1 (TC1) Maine Street Zoning District; and Village Review Zone (Map U13, Lot 52).**

This agenda is mailed to owners of property within 200 feet of proposed development sites. In cases where Committee action is pending this agenda serves as notice of same. In cases where the Committee's role is to advise the Planning Board, this agenda is mailed as a courtesy along with notice of the Planning Board meeting. The Staff Review Committee meeting is open to the public. All are invited to attend and participate. For further information call Anna Breinich at the Brunswick Department of Planning and Development (725-6660).

APPLICATION/CHECK LIST
SPECIAL PERMIT FOR UNCLASSIFIED AND OMMITTED USES
BRUNSWICK PLANNING BOARD

1. Applicant: (nonprofit management association)

   Name: Crystal Spring Farm Community Solar Association
   Address: 44 Thompson Street
   Brunswick, ME 04011-3026
   Phone #: 207-725-7282, Attn: Steve Weems

2. Business: (installer)

   Name: ReVision Energy, LLC
   Address: 142 Presumpscot Street
   Portland, ME 04103
   Phone #: 207-221-6342, Attn: Allison Gehnrich

3. Property/Building Owner: & Lessee
   a. Owner:
   Name: Brunswick-Topsham Land Trust
   Address: 108 Maine Street
   Brunswick, ME 04011
   207-729-7694, Attn: ~~Angela Turtchell~~

   b. Lessee: Seth Kroeck & Maura Bannon
   Crystal Spring Farm
   277 Pleasant Hill Rd
   Brunswick, ME 04011
   207-729-1112
   Attn: Seth Kroeck

4. Assessor's Tax Map # 21 Lot # 16 of subject property.

5. Zoning District Coastal Protection 1

6. Street Address of Parcel(s) For Consideration: 277 Pleasant Hill Road

7. Planning Area (See Appendix I): Rural Coastal Protection Planning Area

Lessee/ Owner Signature: [signature] / [illegible], President, BTLT
Business
~~Applicant~~ Signature (*if different*): Allison H Gehnrich

* Project Description

SUBMISSION REQUIREMENTS

~~Business~~ Applicant Signature [signature]

- Site Plan. If copies are greater than 11" x 17", submit 17 copies of all materials. Otherwise, one copy is sufficient. Site plan should include all elements indicated in the application packet.

On this form, or on a separate letter to the Planning Board, please indicate your responses to the following:

* The proposed project is a solar electricity array. Please refer to the accompanying Project Description and explanation of the roles of the applicant and other parties listed above.

1. How does your application further the Planning Goals for the Planning Area in which your property is located. Please indicate each of the Planning Area Goals with your response.
The solar array will protect marine resources by reducing CO_2 emissions by about 100,000 lbs/year, thereby helping to mitigate ocean warming and acidification. Protects the watershed by creating no impervious surfaces while generating clean, renewable energy. This project will benefit Crystal Spring Farm, enhancing the viability of local agriculture production and conservation of rural open space. The scale of the project is compatible with the rural character of the area. It will demonstrate how low-impact, clean energy can be produced locally.

2. How many square feet of space is the proposed use going to occupy? 12,250 (see below). Is this use to be located within an existing structure? NO If a new structure(s) is proposed how many square feet is the structure(s)? Please note the 12,250 sf figure (above) is the footprint of the array. It will be located in an open field about 3.5 feet above the ground on steel poles (no excavation, no foundation, and no impervious surface (except for the diameter of the poles) and allowing grazing up to and under the array.

3. How many people are to be employed at this site should the Special Permit be granted?
8 during installation, none during operation.

4. If this involves a residential component, how many dwelling units are proposed? N/A.

5. How many customers are likely to use the site during the course of a day? N/A week? N/A. Please anticipate peak demand. There will be some educational materials for the benefit of interested walkers and others.

6. How many service vehicles per week do you anticipate? None

7. What are the sizes of vehicles that will service the business should the Special Permit be granted? N/A

8. If you are reusing a structure, demonstrate the mutual benefits associated with your application request. (In other words, how will this project provide a benefit to its larger area in spite of the fact that it may be occurring within a pre-existing structure that is generally larger than typically found. This project is designed to be a demonstration and educational project about the benefits of "going solar." It may inspire other landowners to install solar arrays and/or consider the benefits of conserving rural open space by working with a land trust and offer a model for other farmers who want to go solar.

9. Explain how this application enhances or further maintains a pedestrian oriented character for the larger neighborhood. N/A

NOTIFICATION
SPECIAL PERMIT APPLICATION
FOR UNCLASSIFIED AND OMMITTED USES

Pursuant to Section 701 of the Brunswick Zoning Ordinance, land uses that are neither permitted nor prohibited may be considered by the Planning Board, subject to a Special Permit. Notice is required to be forwarded to any property owner within 200 feet of the lot boundaries of the proposed permit.

Applicant: Crystal Spring Farm Community Solar Association

Business Name: ReVision Energy, LLC (Installer) and other participating entities

Proposed Land Use: Residential Scale Solar Array (8 families)

Street Address of Property: 277 Pleasant Hill Road

Zoning District of Property: Coastal Protection 1

The Planning Board will conduct a PUBLIC HEARING on this Special Permit application on _____. As a person entitled to notice, you may submit comments on the proposal to the Planning Board, or may provide testimony at the Public Hearing. The Planning Board may deny the Special Permit if it finds that, based on evidence provided by persons entitled to notice that the proposal shall 1) adversely effect the enjoyment or use of your property; or 2) that the proposal will devalue such property.

The application is on file at the Planning Office. For further information contact 725-6660.

Conserving Our Natural Heritage Since 1985

BRUNSWICK-TOPSHAM
LANDTRUST

DIRECTORS
Elizabeth Armstrong
Brad Babson, *President*
Doug Bennett, *Vice President*
William Ferdinand
Jerry Galleher
Kristine Ganong
Christopher Goodwin
Elizabeth Hertz
Mary Johnson, *Treasurer*
Wells Johnson
Esther Lacognata Palmer
Jeff Nelson
Richard Mersereau
Tom Settlemire
Charles Spies
Linton Studdiford
Emily Swan, *Secretary*
Lloyd Van Lunen
Steve Walker
Margaret Wilson

ADVISORY COUNCIL
Janet Bodwell
Claude Bonang
Everett Carson
Dana Cary
Jane Crichton
Forrest Dillon
Nelia Dunbar
Marilyn Dwyer
Rollin Fessenden
Averil Fessenden
Gary Fogg
Spike Haible
Alicia Heyburn
Henry Heyburn
Heather Higbee
Eileen Johnson
Fred Koerber
John Lichter
N. Macauley Lord
Lisa Martin
William Mason
Daniel Morgenstern
Arlene Morris
Herbert Paris
Steven Pelletier
Liz Pierson
Jan Pierson
Debora Price
Richard Pulsifer
Carla Rensenbrink
Patricia Ryan
Christine Sloan
Jym St. Pierre
Steven Stern
Millie Stewart
Brooks Stoddard
Kathy Thorson
David Vail
Jan Wilk
Martin Wilk
Richard Wilson
Sarah Wolpow

STAFF
Angela Twitchell, *Executive Director*
Caroline Eliot, *Associate Director*
Chris Cabot, *Land Conservation & Farmland Protection Specialist*
Lee Cataldo, *Outreach & Education Coordinator*
Ellen Rodgers, *Financial & Administrative Manager*

June 20, 2016

Jared Woolston, Planner
Town of Brunswick
85 Union Street
Brunswick, ME 04011

Dear Jared:

The Brunswick-Topsham Land Trust (BTLT) is the fee owner of the Crystal Spring Farm property. In the interest of supporting local agriculture and the rural character of the Coastal Protection areas of Brunswick, the BTLT has entered into a long-term lease with Seth Kroeck and Maura Bannon to operate the farm. Seth and Maura have taken a leadership role in the proposed community solar electricity project on the farm by offering to be the site host. The farm also will be the principal beneficiary of the project.

Consequently Seth and Maura have entered into a host site lease with the prospective owners of the array, eight Brunswick families (including themselves), through a nonprofit association these families have formed to manage the project. This is the Crystal Spring Farm Community Solar Association. The solar array will be installed by ReVision Energy LLC.

The BTLT wholeheartedly supports this solar project and has signed the host site lease for the purpose of confirming its consent to this project. Therefore, as the record owner of the land we are pleased to further confirm our authorization for ReVision Energy LLC to apply for a special permit for this use. We note that as our lessee, Seth Kroeck and Maura Bannon control the use of the site, subject to the terms of the BTLT's lease with them. Clearly Seth and Maura support this project as (i) the participating member with the largest share of the array, and (ii) entering into the host site lease.

Please let me know if you have any questions. Thank you for your help on this great project.

Very truly yours,

Bradley O. Babson
President

CSF BTLT Letter to Brunswick Planner 6-17-16

108 Maine Street, Brunswick, ME 04011 / 207-729-7694 / info@btlt.org / www.btlt.org

ACCREDITED LAND TRUST ACCREDITATION COMMISSION

FSC® certified • SFI Fiber Sourcing certified • Made with Total Chlorine Free (TCF) and Elemental Chlorine Free (ECF) virgin fiber content • 10% post-consumer, Process Chlorine Free (PCF) and lignin-free fiber

Crystal Spring Farm Community Solar Association

Summary Project Description to Accompany Special Permit Application

Updated July 1, 2016

This is a summary description of a project to install a solar photovoltaic electricity array at Crystal Spring Farm. It is meant to accompany the Special Permit application for this project. This project is a cooperative initiative of Crystal Spring Farm, the Brunswick-Topsham Land Trust, and a group of Brunswick families who cannot install solar capacity where they live. This type of installation is called a community solar farm. It is a key project in the Solarize Brunswick effort. ReVision Energy is the installer.

The purpose of this overview is to give a brief description of the project, identify the key cooperating parties and note their respective roles, and summarize the objectives (and prospective benefits) of the project.

General Description

Physically, the project would be a ground-mounted, photovoltaic solar electricity generating system with a capacity of 75.79 kW (kilowatts). This is a small-scale electrical generating facility. The array would provide clean, renewable energy to Crystal Spring Farm and seven other Brunswick families. This is an all-Brunswick, leadership project, which has helped other Brunswick residents qualify for the maximize price discount for solar equipment under the Solarize Brunswick initiative.

In a community solar project like this, a group of electricity users in the same utility service area get together to build a single solar electricity generating facility, put all the power on the electrical grid, and get a credit for the power allocated to each participant via a meter at the solar array on his/her monthly electrical bill. This electricity transfer process is known as net metering. These are small-scale, distributed power projects, where the Maine Public Utilities Commission (PUC) limits the number of accounts that can use electricity from a community solar project to nine.

Each member of the participating group owns a different share of the array, sized to meet each member's electricity needs. The members form a nonprofit association, similar to a homeowners association, to manage the project.

In this case, the proprietors of Crystal Spring Farm, Seth Kroeck and Maura Bannon, are providing the site. As the largest electricity user, they also will own the largest share (44%) of the project. They have two CMP accounts, which count as two of the nine accounts allowed by the PUC. The other seven members will own shares ranging from 3-14% of the project. Kroeck/Bannon lease the farm property from the Brunswick-Topsham Land Trust (BTLT). The land trust is a consenting working partner in this project only.

Participants

The participants and their roles, therefore, are as follows:

- Seth Kroeck and Maura Bannon, the proprietors of Crystal Spring Farm, are offering the site and will own the largest share of the solar array.

- Legally, each of the participating members will own an undivided share in the total project, in accordance with each member's investment share and electricity needs. The members have formed the Crystal Spring Farm Community Solar Association, a nonprofit corporation to manage the project.

- Kroeck/Bannon have entered into a host site lease with the association, so the association (and its members) have the right to build and manage the project.

- Kroeck/Bannon have leased the farmland from the Brunswick-Topsham Land Trust, so as the fee owner of the land the BTLT has entered into the host site lease to consent to the project.

- ReVision Energy, LLC has been selected by the Town of Brunswick for the Solarize Brunswick initiative, and also by the members of the association, as the installer of the project.

- ReVision Energy will own the project during construction only. Upon completion of the project it will be turned over to the eight members of the association, each of whom will receive a Bill of Sale for his/her share of the project. As the owner during construction, ReVision Energy has applied for the Special Use permit, by mutual agreement, on behalf of the eventual owner/members, Crystal Spring Farm, and the BTLT.

- As noted, the association will manage the project once it is installed and accepted by its members. Thus the members, through the association, will be responsible for insurance, maintenance, and eventual removal of the project, at the end of its useful life. A list of association members is included in the supporting materials filed with the Special Permit application.

Project Physical Characteristics

A site plan, various schematics, and related drawings are included with the application. Please refer to these materials. The array will be located in pastureland at Crystal Spring Farm, on the south side of Pleasant Hill Road, near the intersection of Pleasant Hill Road and Woodside Road. The photovoltaic panels will be mounted two high in a portrait pattern on a steel racking system.

There will be no concrete or other foundation. The racking system will be attached to steel posts pile-driven into the ground to a depth of about nine feet. As configured to fit this location, there will be four rows, separated by about 18 feet. Each row will be about 125 feet long and about 10 feet high. The bottom edge of the panels will be about 3.5 feet off the ground, to facilitate mowing. The panels will be tilted at a 35 degree angle and face south (away from Pleasant Hill Road.) The connection from the array to a nearby new power pole (to be installed by CMP) on Pleasant Hill Road will be underground. Although the solar panels will shed rain, there will be no impervious surface or access road associated with this installation.

There will be no moving parts, and limited maintenance associated with this installation. It will just sit there, quietly producing renewable energy from the sun for an estimated useful life of 30-40 years. The panels will not be shoveled in the winter. Since the panels will face away from Pleasant Hill Road, there will be no glare to distract travelers on this arterial.

The association plans to put some educational materials up about the project, either on the steel racking system or perhaps on a tasteful free-standing display. One purpose of the project is to provide educational materials about the virtues of solar energy and inspire others to convert to this clean, renewable source of electricity.

The array clearly will be associated with Crystal Spring Farm, as a model of how local agricultural producers can "go solar." The participants and the BTLT also are hopeful this may be a replicable model for other rural landowners and land trusts, and the signage and educational materials will provide information of this nature.

The array will be buffered on Pleasant Hill Road side of the array (the north side) by some tree plantings and/or other greenery, the exact configuration still under discussion with neighbors and the BTLT.

Abutter Considerations

The project (same total size) originally was proposed on the east side of Woodside Road, in a different configuration (two longer rows, same total number of panels). This was the subject of a Planning & Development Department staff review on June 22. At that meeting, some of the abutters attended and asked for the project to be relocated to an alternate site. The possibility of introducing some green buffering also was discussed. As a result, the project has been moved to the currently proposed location, the array has been reconfigured into a shorter four-row design, and vegetative buffering has been added to the plan. Seth Kroeck and the association also hosted a neighborhood meeting to discuss the new location.

Project Impacts and Benefits

The project will have near zero site and local environmental impacts. There will be no access road, no excavation or other ground work, no foundation, no noise, and no moving parts (i.e., this will be a fixed array). The farmland all around the array will be useable as pasture, and the array purposefully has been located to not take up any space on ground suitable for row crops.

The overall environmental impact is designed to be positive, although admittedly small due to the small scale of the project. The project will eliminate about 100,000 pounds per year of CO2 that would be produced from fossil fuel generation of this amount of electricity. This is meant to be a leadership project, showing the way toward a "greening" of agricultural and residential electricity use, with accompanying information about what kinds of actions are necessary to mitigate climate change and undertake similar projects.

To summarize some of the potential benefits:

- Support local agriculture in a high-visibility manner, pointing the way to the use of solar power on other farms.

- Lead in the conversion of Crystal Spring Farm to green power, plus the production and use of solar power for the other participants, who otherwise would not have access to it (demonstrate the utility of community solar projects).

- Provide an opportunity to educate people on the value of solar electricity and an example of how to obtain it.

- Fulfill broader community development and environmental educational objectives (e.g., neighbor cooperation and local, small-scale production of electricity).

- Facilitate the acquisition by land trusts of interests in land from landowners who may have an interest in solar electricity generation as a use of their land.

- Provide a leadership example of why it is important to have supportive public policies in Maine for the development of solar electrical energy.

- Be an anchor project to help others realize the full benefits of the Solarize Brunswick initiative.

SLW
Revised 7-1-16

Crystal Spring Farm Community Solar Association – Project Description
SCHEDULE C – Site Map

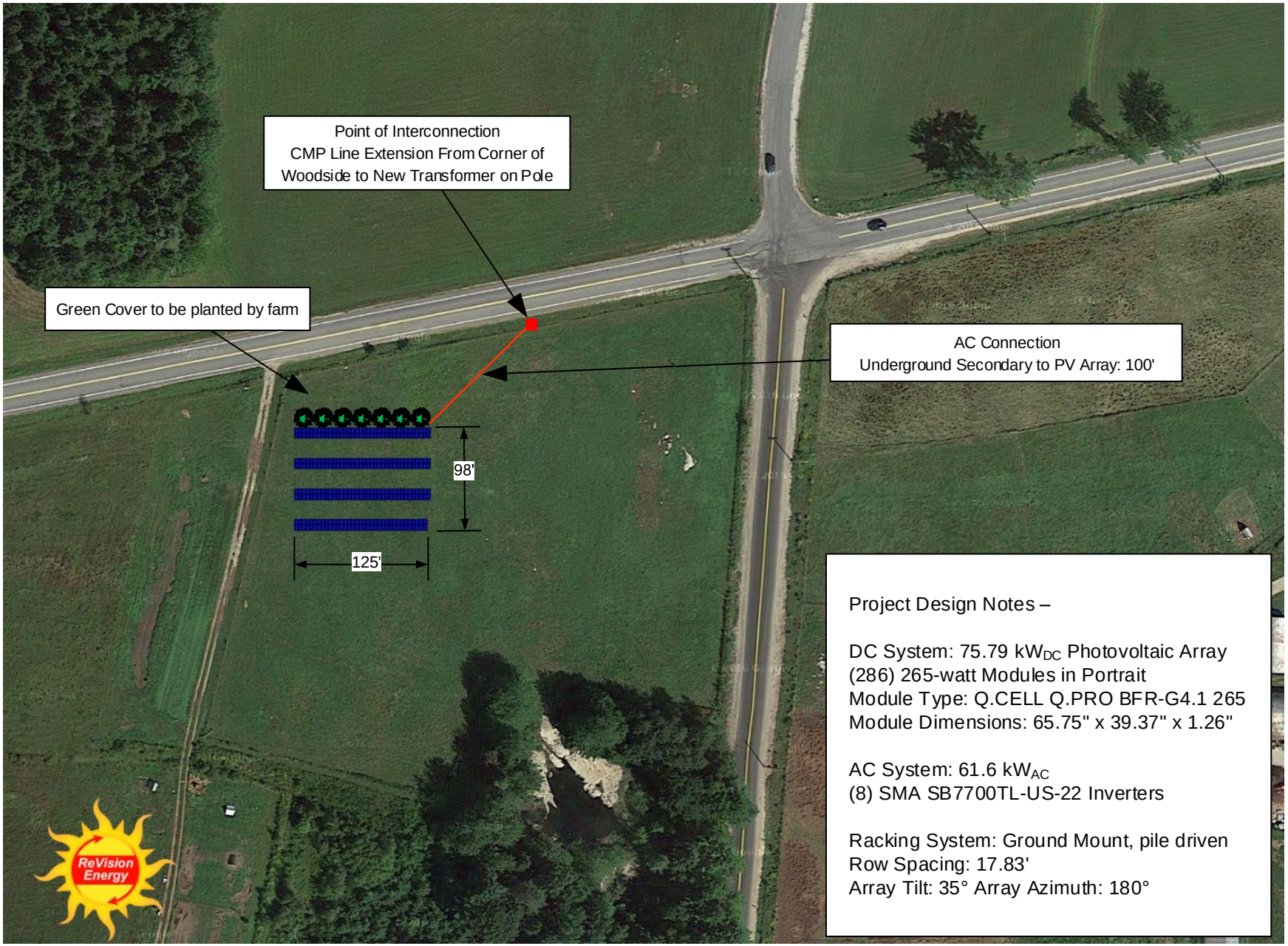

Project Design Notes –

DC System: 75.79 kW_{DC} Photovoltaic Array
(286) 265-watt Modules in Portrait
Module Type: Q.CELL Q.PRO BFR-G4.1 265
Module Dimensions: 65.75" x 39.37" x 1.26"

AC System: 61.6 kW_{AC}
(8) SMA SB7700TL-US-22 Inverters

Racking System: Ground Mount, pile driven
Row Spacing: 17.83'
Array Tilt: 35° Array Azimuth: 180°

ReVision Energy

142 Presumpscot Street
Portland, ME 04103
(207) 221-6342

Customer Name:

Crystal Spring Farm
277 Pleasant Hill Rd
Brunswick, ME 04011

System Type:

Photovoltaic Array
Relocation option

Designed by: LB

Date: June 30, 2016

SITE MAP

SHEET A01

© Copyright ReVision Energy

This diagram is provided as a service and is based on the understanding of the information supplied. It is subject to change based on actual conditions, applicable edition of the National Electric Code, and local governmental authorities.

Community Solar Farms

Cost-effective clean energy for your community

Technical Considerations for Community Solar Farm Sites

142 Presumpscot Street
Portland, ME 04103
(207) 221-6342

Project Information

Crystal Spring Farm
277 Pleasant Hill Rd
Brunswick, ME 04011

System Type:

Community Solar Farm,
Photovoltaic Array

Drawing Name:

Cover Page

Page:	1 of 8
Drawn By:	L. Brostek
Date:	August 13, 2015
Rev. Number:	0

Project Design Notes:

© Copyright ReVision Energy

This diagram is provided as a service and is based on the understanding of the information supplied. It is subject to change based on actual conditions, applicable edition of the National Electric Code, and local governmental authorities.

Professional Engineer Stamp of Approval:

Dimensions of Photovoltaic Array, Ground Mount Racking System, Side View:

Key Design Elements:
- South-facing (180° True)
- Array Tilt of 35°
- Leading Edge, 3'-6" from ground
- Driven Posts

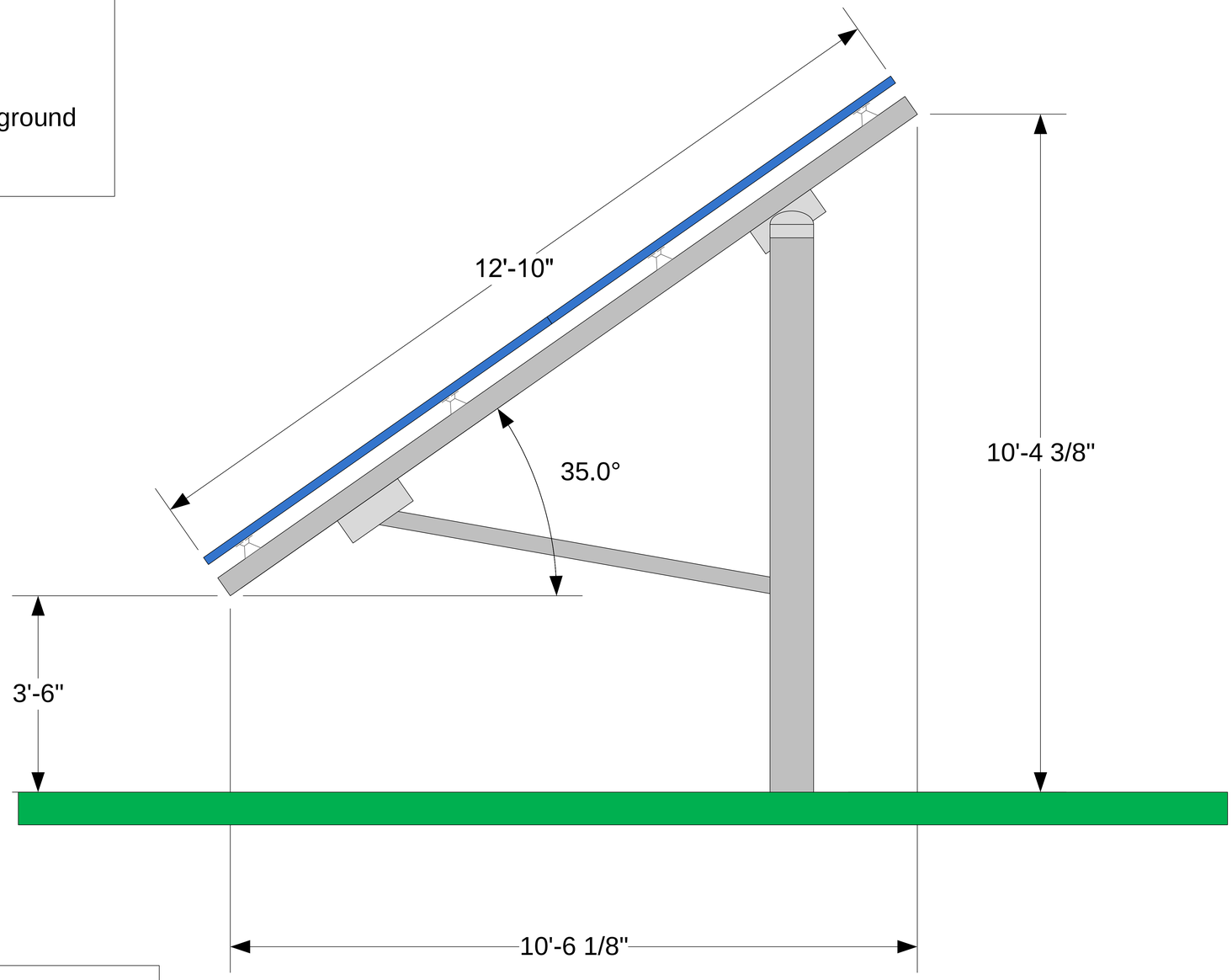

72-Cell Photovoltaic Module:
- ReneSola 310W
- Model No. JC310M-24/Ab
- Dimensions 77.01" x 39.06" x 1.57"

142 Presumpscot Street
Portland, ME 04103
(207) 221-6342

Project Information

Crystal Spring Farm
277 Pleasant Hill Rd
Brunswick, ME 04011

System Type:

Ground Mount Photovoltaic Array

Drawing Name:

Ground Mount Profile

Page:	6 of 8
Drawn By:	L. Brostek
Date:	August 13, 2015
Rev. Number:	0

Project Design Notes:

© Copyright ReVision Energy

This diagram is provided as a service and is based on the understanding of the information supplied. It is subject to change based on actual conditions, applicable edition of the National Electric Code, and local governmental authorities.

Professional Engineer Stamp of Approval:

Inter-row Spacing Requirement (Shadow Distance):

To eliminate shading during peak sun hours, distance between rows shall be a minimum of **17'-4"** from the top of the front panel to the bottom of the back panel. Shading calculations are based on the sun's position and altitude angle over New England on Winter Solstice (21 December).

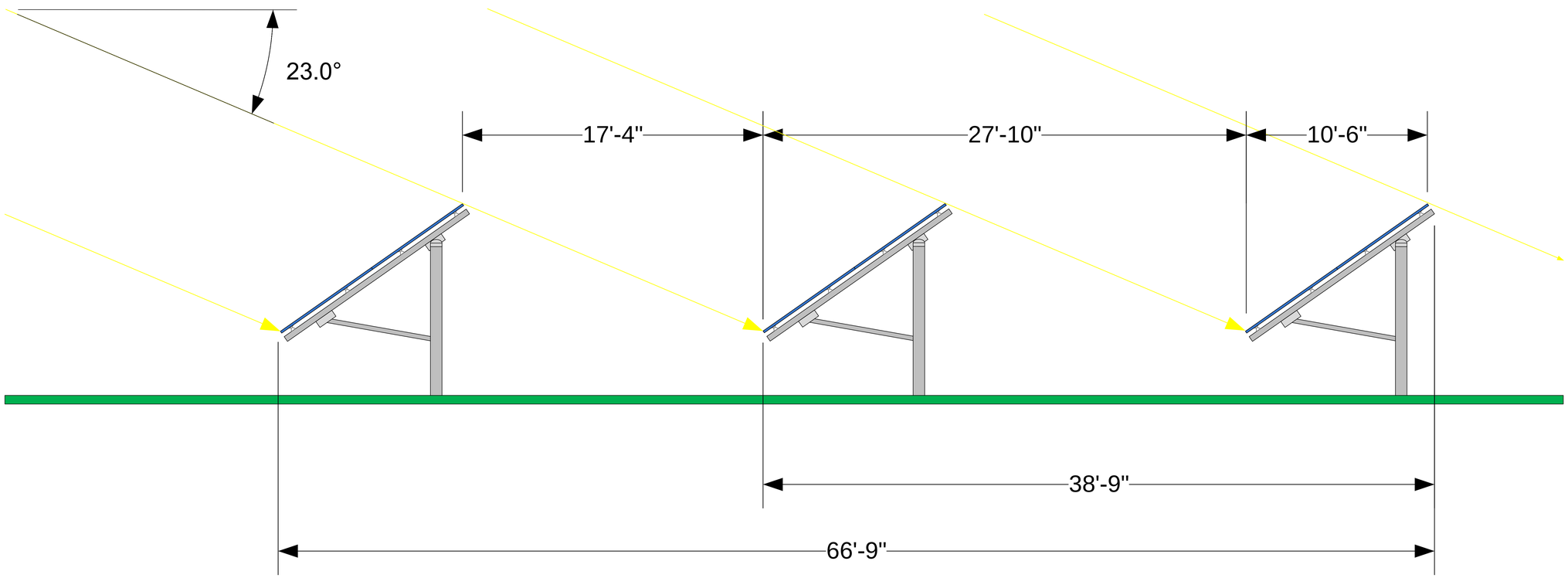

142 Presumpscot Street
Portland, ME 04103
(207) 221-6342

Project Information

Crystal Spring Farm
277 Pleasant Hill Rd
Brunswick, ME 04011

System Type:

Ground Mount Photovoltaic Array

Drawing Name:

Inter-Row Spacing

Page:	7 of 8
Drawn By:	L. Brostek
Date:	August 13, 2015
Rev. Number:	0

Project Design Notes:

© Copyright ReVision Energy

This diagram is provided as a service and is based on the understanding of the information supplied. It is subject to change based on actual conditions, applicable edition of the National Electric Code, and local governmental authorities.

Professional Engineer Stamp of Approval:

Professional design, installation and service of solar energy systems

Crystal Spring Farm Community Solar Association
Project Description

February 23, 2016

Schedule A: Membership Information

Schedule B: Scope of Work

Schedule C: Site Map

Schedule D: One Line Drawing

Schedule E: Projected 10-Year Budget

Schedule F: Helioscope Production Estimate

Schedule G: Manufacturer's Warranties

91 West Main Street
Liberty, ME 04949
(207) 589-4171

142 Presumpscot Street
Portland, ME 04103
(207) 221-6342

14 Dixon Ave
Concord, NH 03301
(603) 415-0151

7 Commercial Drive
Exeter, NH 03833
(603) 679-1777

www.ReVisionEnergy.com

Schedule A- Member Information Sheet
Crystal Spring Farm CSA

Name	Ownership Status	Name on CMP Bill	Address	CMP Account Number	Email	Phone	Pymt	kW	Share %	Share Price	Solarize Discount	Discounted Share Price
Seth Kroeck (& Maura Bannon) Pole/Barn	JWTROS	Seth D Kroeck	277 Pleasant Hill Road, Brunswick, ME 04011	514-033-0143-015	seth@crystalspringcsa.com	207-729-1112	Cash	24.640	32.510%	$97,715	$2,957	$94,758
Seth Kroeck (& Maura Bannon) Farmhouse	JWTROS	Seth D Kroeck	277 Pleasant Hill Road, Brunswick, ME 04011	514-045-7115-002	seth@crystalspringcsa.com	207-729-1112	Cash	8.733	11.523%	$34,633	$1,048	$33,585
Steven L Weems (& Susan)	JWTROS	Steven L Weems	44 Thompson Street, Brunswick, ME 04011	514-003-6183-014	slweems@gmail.com	207-729-7624	Cash	8.421	11.111%	$33,396	$1,011	$32,385
Thomas Rumpf (& Annee Tara)	JWTROS	Thomas A Rumpf	34 Belmont Street, Brunswick, ME 04011	514-003-4399-015	trumpf@tnc.org	207-725-1249	Cash	4.678	6.173%	$18,554	$561	$17,993
James & Jane Nichols-Ecker	JWTROS	James W Ecker	67 Simpson's Point Road, Brunswick, ME 04011	514-001-3642-012	jecker67@gmail.com	207-729-0926	Cash	4.990	6.584%	$19,790	$599	$19,191
David Vail (& June)	JWTROS	David Vail	1 Oakland Street, Brunswick, ME 04011	514-003-4897-015	dvail@bowdoin.edu	207-729-0879	Cash	2.495	3.292%	$9,895	$299	$9,596
Cathy Fogler (& Bruce Ketchum)	JWTROS	Catherine M Fogler	17 Barrows Street, Brunswick, ME 04011	514-003-6130-012	fogket@gmail.com	207-729-4275	Cash	4.367	5.761%	$17,317	$524	$16,793
Michael Cain (& Debra VamVikites)	JWTROS	Michael L Cain	321 Woodside Road, Brunswick, ME 04011	514-042-6649-003	mcain@bowdoin.edu	207-504-4594	Cash	14.347	18.930%	$56,897	$1,722	$55,175
Peter Simmons (& Charlotte Agell)	JWTROS	Peter J Simmons	39 Columbia Avenue, Brunswick, ME 04011	514-003-5621-018	peter@bowdoinfestival.org	207-729-4546	Cash	3.119	4.115%	$12,369	$374	$11,995
								75.790	100.000%	$300,566	$9,095	$291,471

Crystal Spring Farm Community Solar Association
Project Description
Schedule B: Scope of Work

Project Location: 277 Pleasant Hill Road, Brunswick, ME 04011 as shown on site map in Schedule C.
Size: 75.79 kilowatts (kW)
Estimated Electrical Generation: 101,574 kilowatt hours (kWh)

Scope of Work. The scope of work for this project shall include the following:

1.1 Solar Farm. ReVision Energy shall provide all labor, materials and equipment for the construction of the above-named Solar Farm, to include:

- (286) QCell 265-watt, photovoltaic modules, or equivalent with 12-year workmanship warranty and 25-year manufacturer's warranty;
- (8) SMA 7700TL-US inverter, or equivalent, with integrated utility disconnects and Revenue Grade Metering and 10-year manufacturer's warranty;
- Solar Log 350 & GE Meter, with 10-year data cellular plan and Solar Log Web Monitoring Services;
- Site preparation and clean up;
- All materials necessary to mount and wire the solar electric system. This includes all disconnects, fusing, and metering to meet both the National Electrical Code and the NABCEP certification;
- Professional installation by ReVision Energy's Master Electrician and NABCEP certified solar technicians;
- Copies of all warranties and product manuals;
- One-time training to one or more Solar Farm members to operate and monitor the system, and to review the measurement and allocation of energy credits by the local utility.

1.2 Utility Interconnection and Permitting. ReVision Energy shall be responsible for managing and fees for the utility interconnection, to include:

- Application to the local utility for installation of a new electrical meter;
- Installation of a new, stand-alone electrical service for the solar farm;
- Interconnection and impact fees required to interconnect the solar farm to the utility electric grid;

- Management of state and utility rebate applications and interconnection standards;
- Management of utility net energy billing application;
- Application fees for utility, state and local permits;

1.3 ReVision Warranty Coverage.

1.3.1 For a period of five (5) years following installation, ReVision Energy will repair, at no cost to the customer, equipment sold to the customer by ReVision Energy in accordance with the terms of the equipment manufacturer's warranty. Thereafter, ReVision Energy shall service warranties of manufacturers of equipment sold to the customer by ReVision Energy but the customer shall be responsible to pay the cost of ReVision Energy's labor.

1.3.2. For a period of five (5) years following installation, ReVision Energy warrants its workmanship supplied in connection with equipment purchased from, and installed by ReVision Energy. The customer shall pay the cost of ReVision Energy's labor to service or repair equipment purchased from a supplier other than ReVision Energy.

1.3.3. The customer shall be responsible to pay any costs other than labor to service or repair equipment installed by Revision Energy including, but not limited to, shipping charges in connection with parts that are not covered by the manufacturer's warranty.

1.3.4. The customer shall be responsible to pay all costs, including those for labor, equipment and materials, incurred by ReVision Energy to repair or service equipment purchased from us, but installed by others.

1.4 Exclusions. The following work shall be performed by others and shall be expressly excluded from the scope of work for this project:

- Fees associated with an energy audit that may be required in order to qualify for state rebate or other incentive programs;
- Repair or replacement of damaged existing site conditions;
- Framing, supporting or any structural upgrades to roof or building;
- Site work (including trenching) unless specifically outlined in scope of work.

Crystal Spring Farm Community Solar Association – Project Description
SCHEDULE C – Site Map

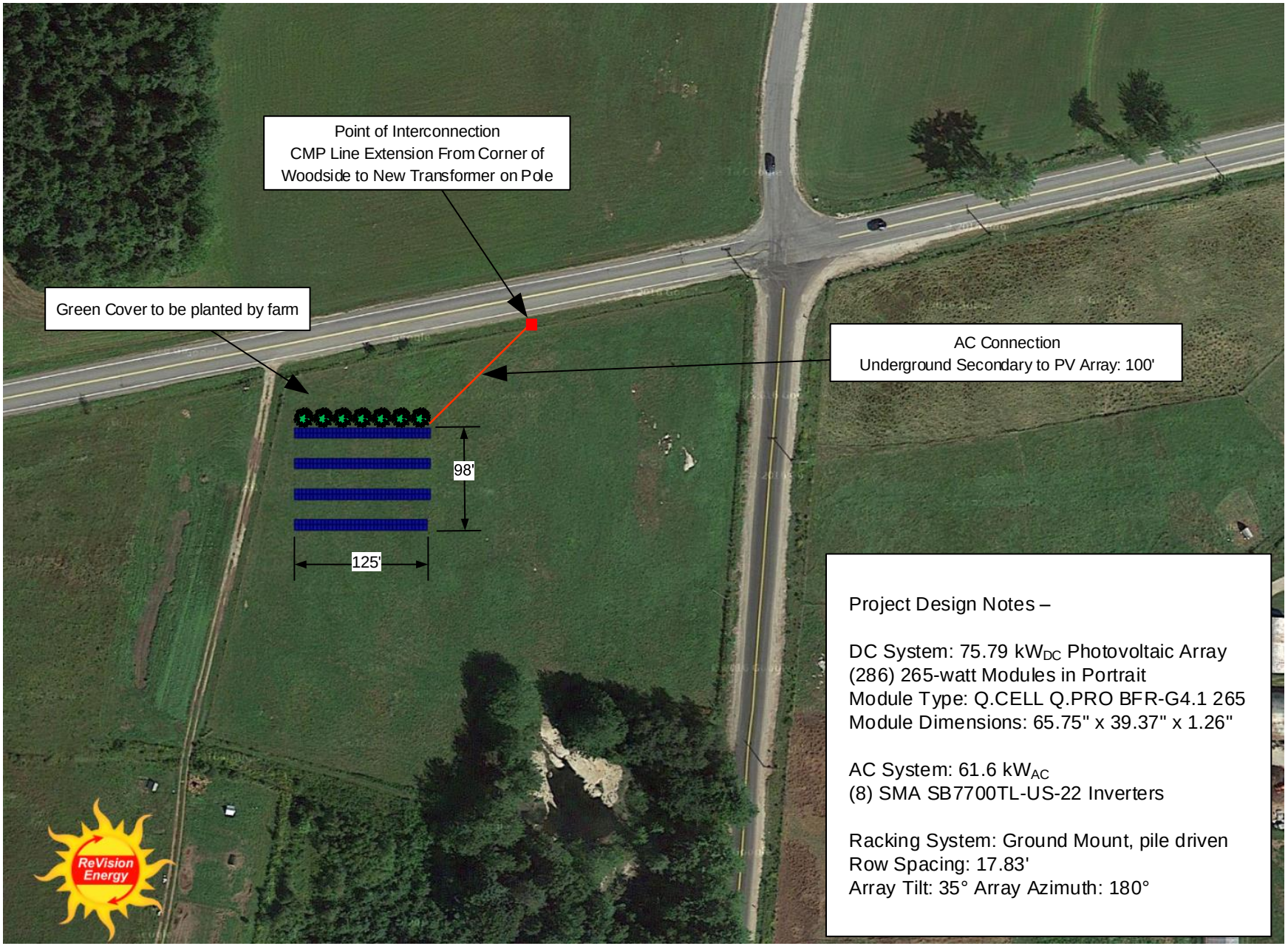

Project Design Notes –

DC System: 75.79 kW_{DC} Photovoltaic Array
(286) 265-watt Modules in Portrait
Module Type: Q.CELL Q.PRO BFR-G4.1 265
Module Dimensions: 65.75" x 39.37" x 1.26"

AC System: 61.6 kW_{AC}
(8) SMA SB7700TL-US-22 Inverters

Racking System: Ground Mount, pile driven
Row Spacing: 17.83'
Array Tilt: 35° Array Azimuth: 180°

ReVision Energy

142 Presumpscot Street
Portland, ME 04103
(207) 221-6342

Customer Name:

Crystal Spring Farm
277 Pleasant Hill Rd
Brunswick, ME 04011

System Type:

Photovoltaic Array
Relocation option

Designed by: LB

Date: June 30, 2016

SITE MAP

SHEET A01

© Copyright ReVision Energy

This diagram is provided as a service and is based on the understanding of the information supplied. It is subject to change based on actual conditions, applicable edition of the National Electric Code, and local governmental authorities.

Crystal Spring Farm Community Solar Association – Project Description
Schedule D – One-Line Diagram

Electrical Design Notes

- All conductors shall be copper unless specified otherwise.
- System-wide voltage drop shall not exceed 5%.
- Lowest expected ambient temperature is based on ASHRAE Extreme Min for the specified location.
- Average high temperature is based on ASHRAE 2% Avg. for the specified location.
- Point of Interconnection: New service at existing utility pole

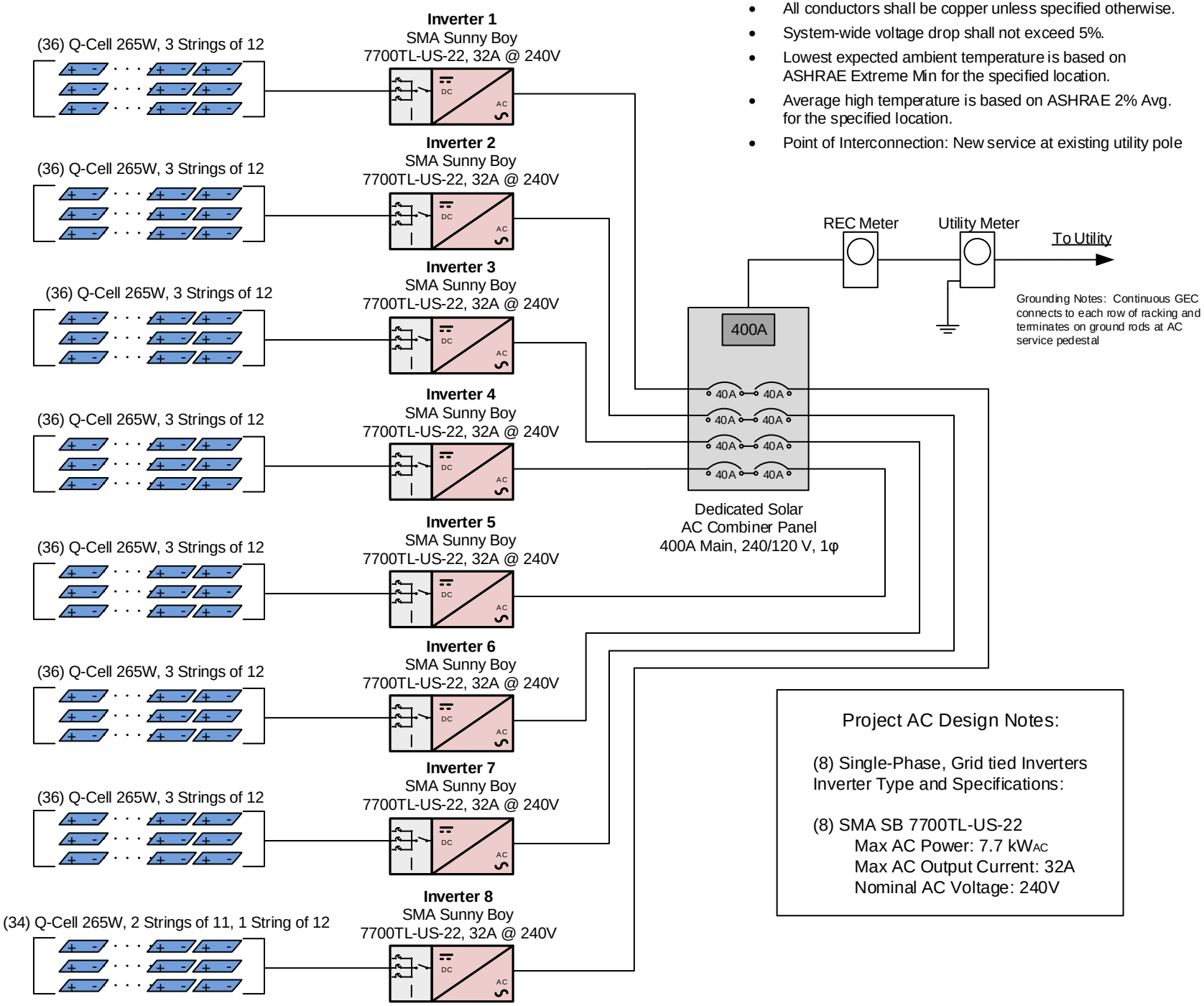

Project AC Design Notes:

(8) Single-Phase, Grid tied Inverters
Inverter Type and Specifications:

(8) SMA SB 7700TL-US-22
Max AC Power: 7.7 kW_{AC}
Max AC Output Current: 32A
Nominal AC Voltage: 240V

142 Presumpscot Street
Portland, ME 04103
(207) 221-6342

Customer Name:

Crystal Spring Farm
277 Pleasant Hill Rd
Brunswick, ME 04011

System Type:

75.79 kW_{DC}
Photovoltaic Array

Designed by: LB

Date: February 23, 2015

ONE-LINE DIAGRAM

SHEET E01

© Copyright ReVision Energy

This diagram is provided as a service and is based on the understanding of the information supplied. It is subject to change based on actual conditions, applicable edition of the National Electric Code, and local governmental authorities.

Crystal Spring Farm CSF

Project Description, Schedule E

Projected 10-Year Operating Budget

Project Parameters	
75.79	kW
101,574	kWh
1340.2	kWh/kW
0.50%	Derate Factor
10	# of Years RECs sold

Operating Budget	Rate Variable	Rate Fixed	CSF Total	$/1 kW Share	Projected Annual Budget per 1 kW/Share 1	2	3	4	5	6	7	8	9	10
INCOME														
REC Sales ($/MWH)	$ 30.00		$3,047	$40.21	$0.00	$40.21	$40.00	$39.80	$39.61	$39.41	$39.21	$39.01	$38.82	$38.63
(sale of RECs minted in Y1 become available in Y2, etc.)														
Total Income			**$3,047**	**$40.21**	**$0.00**	**$40.21**	**$40.00**	**$39.80**	**$39.61**	**$39.41**	**$39.21**	**$39.01**	**$38.82**	**$38.63**
EXPENSES														
Real Estate Property Tax	$ 360.00			$4.75	$4.75	$4.84	$4.94	$5.04	$5.14	$5.24	$5.35	$5.46	$5.57	$5.68
Real Estate Property Tax Escalator	2%													
Landowner lease payments ($/year)		$ 1.00	$1	$0.01	$0.01	$0.01	$0.01	$0.01	$0.01	$0.01	$0.01	$0.01	$0.01	$0.01
Insurance (general liability)		$ 1,000.00	$1,000	$13.19	$13.19	$13.19	$13.19	$13.19	$13.19	$13.19	$13.19	$13.19	$13.19	$13.19
Insurance (property)		$ 925.00	$925	$12.20	$12.20	$12.20	$12.20	$12.20	$12.20	$12.20	$12.20	$12.20	$12.20	$12.20
Electric Meter		$ 180.00	$180	$2.37	$2.37	$2.37	$2.37	$2.37	$2.37	$2.37	$2.37	$2.37	$2.37	$2.37
Registration Fees (ME Sec of State)		$ 40.00	$40	$0.53	$0.53	$0.53	$0.53	$0.53	$0.53	$0.53	$0.53	$0.53	$0.53	$0.53
Subtotal Expenses			**$2,146**	**$28.32**	**$33.07**	**$33.16**	**$33.26**	**$33.36**	**$33.46**	**$33.56**	**$33.66**	**$33.77**	**$33.88**	**$33.99**
Net Operating Budget			**$901**	**$11.89**	**$33.07**	**$7.05**	**$6.75**	**$6.45**	**$6.15**	**$5.85**	**$5.55**	**$5.24**	**$4.94**	**$4.63**
Cumulative						*$26.02*	*$13.79*	*$13.20*	*$12.60*	*$12.00*	*$11.39*	*$10.79*	*$10.18*	*$9.57*

OPTIONAL EXPENSES		Total	$/kW Share
Annual Inspection & Report		$ 400	$ 5.28
Director and Officer Insurance		$ 750	$ 9.90
Reserve Fund			
CSF Administration	Shop Rate ($75/hr in 2015)		
CSF Training (additional)	Shop Rate ($75/hr in 2015)		
Subtotal Optional Expenses		$ 1,150	$ 15.17

* REC prices subject to market variations.

Crystal Spring Farm CSA (75.79) Crystal Spring Farm CSF, 277 Pleasant Hill Rd Brunswick, ME 04011

Report

Project Name	Crystal Spring Farm CSF
Project Address	277 Pleasant Hill Rd Brunswick, ME 04011
Prepared By	Lukas Brostek luke@revisionenergy.com

System Metrics

Design	Crystal Spring Farm CSA (75.79)
Module DC Nameplate	75.8 kW
Inverter AC Nameplate	61.0 kW Load Ratio: 1.24
Annual Production	101.6 MWh
Performance Ratio	78.4%
kWh/kWp	1,340.2
Weather Dataset	TMY, PORTLAND, NSRDB (tmy2)
Simulator Version	153 (443094f0ad-ea93f843ef-fce6caf820-00aa14f623)

Field Segments

Monthly Production

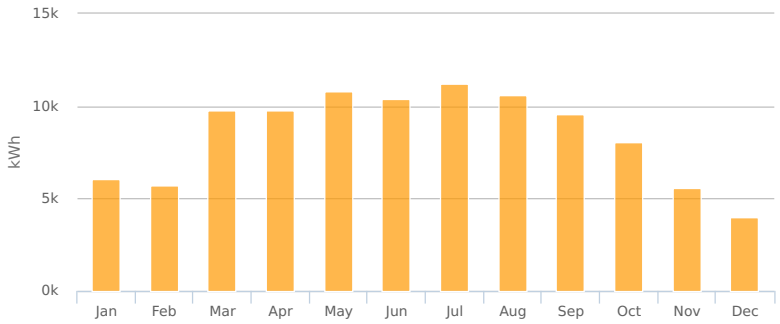

Month	kWh
January	6,027.3
February	5,720.3
March	9,793.8
April	9,795.3
May	10,814.3
June	10,369.4
July	11,235.0
August	10,604.7
September	9,556.6
October	8,083.8
November	5,592.1
December	3,978.3

Sources of System Loss

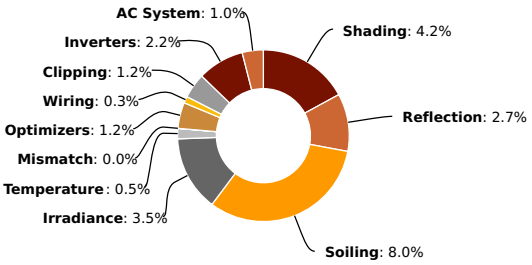

Annual Production

	Description	Output	% Delta
Irradiance (kWh/m²)	Annual Global Horizontal Irradiance	1,440.9	
	POA Irradiance	1,708.3	18.6%
	Shaded Irradiance	1,636.4	-4.2%
	Irradiance after Reflection	1,592.5	-2.7%
	Irradiance after Soiling	1,465.7	-8.0%
	Total Collector Irradiance	**1,465.7**	**0.0%**
Energy (kWh)	Nameplate	112,159.2	
	Output at Irradiance Levels	108,235.8	-3.5%
	Output at Cell Temperature Derate	107,711.5	-0.5%
	Output After Mismatch	107,711.4	0.0%
	Optimizer Output	106,410.6	-1.2%
	Optimal DC Output	106,083.6	-0.3%
	Constrained DC Output	104,845.4	-1.2%
	Inverter Output	102,581.0	-2.2%
	Energy to Grid	**101,571.0**	**-1.0%**
Temperature Metrics			
	Avg. Operating Ambient Temp	10.7 °C	
	Avg. Operating Cell Temp	17.7 °C	
Simulation Metrics			
	Operating Hours	4719	
	Solved Hours	4719	

Condition Set

Description	Condition Set
Weather Dataset	TMY, PORTLAND, NSRDB (tmy2)
Solar Angle Location	Meteo Lat/Lng
Transposition Model	Perez Model
Horizon Profile	Resource Conservation CSF - Horizon File.hor
Temperature Model	Sandia Model

Temperature Model Parameters

Rack Type	a	b	Temperature Delta
Fixed Tilt	-3.56	-0.075	3°C
Flush Mount	-2.81	-0.0455	0°C

Soiling (%)

J	F	M	A	M	J	J	A	S	O	N	D
14.4	31.5	4.5	4.5	4.5	4.5	4.5	4.5	4.5	4.5	4.5	26.1

Irradiation Variance	5%
Cell Temperature Spread	4° C
Module Binning Range	-2.5% to 2.5%
AC System Derate	3.00%

Module Characterizations

Module	Characterization
Q.PRO BFR-G3 265 (2015) (Hanwha Q Cells)	Default Characterization, PAN

Component Characterizations

Device	Characterization
SE7600A-US (240V) (SolarEdge)	Default Characterization
P300 (SolarEdge)	Mfg Spec Sheet

Components

Component	Name	Count
Inverter	SE7600A-US (240V) (SolarEdge)	8 (61.0 kW)
AC Panel	8 input Panel	1
Combiner	1 pole Combiner	8
Combiner	3 pole Combiner	8
AC Home Run	6 AWG (Copper)	8 (954.8 ft)
AC Home Run	4/0 AWG (Copper)	1 (170.6 ft)
Strings	10 AWG (Copper)	24 (4,313.2 ft)
Optimizers	P300 (SolarEdge)	286
Module	Q.PRO BFR-G3 265 (2015) (Hanwha Q Cells)	286

Wiring Zones

Description	Combiner Poles	String Size	Stringing Strategy
Wiring Zone	4	12	Along Racking

Field Segments

Description	Racking	Orientation	Tilt	Azimuth	Intrarow Spacing	Frame Size	Frames	Modules
Field Segment 2	Fixed Tilt	Vertical (Portrait)	35°	170°	17.8 ft	2x1	143	286

Crystal Spring Farm Community Solar Association
Site Lease Agreement

This Site Lease Agreement ("**Agreement**") is made and entered into by Crystal Spring Farm Community Solar Association (hereinafter the "Association"), and Seth Kroeck and Maura Bannon, collectively the "Host" listed below, each of which may be referred to herein individually as a "Party" or collectively as the "Parties." The Host has leased land on which a solar photovoltaic electric generation property (the "**System**") will be located from the Brunswick-Topsham Land Trust ("BTLT" or the "Trust"), which is consenting to the Host to enter into this Agreement pursuant to its lease with the Host.

Association	Crystal Spring Farm Community Solar Association 44 Thompson Street, Brunswick, ME 04011		Host	Seth Kroeck and Maura Bannon 277 Pleasant Hill Road Brunswick, Maine 04011

ASSOCIATION MEMBERSHIP
The members of Crystal Spring Farm Community Solar Association are listed in the attached Exhibit A.

SITE
The Site is described in the attached Exhibit B.

NOTICES
Except as otherwise provided for herein, all notices or other communications under this Agreement shall be delivered pursuant to Section 13 and shall be addressed as follows:

Association Contact	Steven Weems		Host Contact	Seth Kroeck
Phone	207-725-7282		Phone	207-729-1112
Email	slweems@gmail.com		Email	seth@crystalspringcsa.com
Address	44 Thompson Street		Address	277 Pleasant Hill Road
	Brunswick, ME 04011			Brunswick, Maine 04011

RECITALS

Host is the lessee, pursuant to a long-term ground lease with the Trust, of certain real property referenced above (the "**Site**").

The Association wishes to (i) enable its Members to install, own, access, operate, maintain, repair, replace, and dispose of a solar photovoltaic electric generation property (the "**System**"), and control the growth of vegetation impacting the performance of the System, which System will be located on a portion of the Site for the purpose of generating electricity for use by the Members of the Association pursuant to a separate Net Energy Billing Contract between the Association and the UTILITY (the "**NEB Contract**"), and (ii) perform all of the Association's obligations set forth in the NEB Contract and (iii) to enforce all of Association's rights set forth in the NEB Contract (the "**Purpose**").

Host desires to make a portion of the Site available to the Association for this Purpose.

NOW, THEREFORE, in consideration of the mutual representations, warranties and covenants contained in this Agreement, the sufficiency and adequacy of which are hereby acknowledged, the Parties agree to the following:

1. Lease. Host does hereby lease the above described Site for the Term defined in Section 2 to the Association and to the Association's agents, employees and contractors. Host provides an irrevocable, non-exclusive lease to access and use certain portions of the Site described above for the Purpose and to the extent that others have access and use of the Site, Host warrants that such access and use shall not adversely or materially affect the Association's rights. The Association may record a memorandum of this Agreement.

2. Term, Renewal and Removal. The Parties' rights and obligations under this Agreement are expressly conditioned upon the full execution of the NEB Contract and shall commence on the Effective Date of the NEB Contract. The initial term of this Agreement shall be thirty (30) years.

   (a) Renewal. As long as the Association is not in default under this Lease beyond the applicable cure period, if any, at the time of the exercise, Host hereby grants the Association two (2) options to extend the initial term of this lease for an additional period of five years each (the "Options") on the same terms, covenants, and conditions of this Lease. The Association will exercise each Option, if at all, by giving the Host written notice (the "Option Notice") at least ninety (90 days) before the expiration of the Initial Term, or Option period then in effect. The initial term and all renewal terms are referred to herein as the "**Term**."

   (b) Holdover. Any holding over by the Association beyond the Term is prohibited without the prior written approval of the Host. Upon expiration of this lease at the end of the Term or if the Association fails to give the notice required by Section 2(a) above, if the Host and Association are unable to agree upon the terms of a new lease, then the provisions of Section 2(c) below regarding removal shall apply. If the Association is obligated under this section to remove the System and fails to do so within the time prescribed, then the Association shall be in default and the Host, after notice of default and expiration of the applicable cure periods set forth in Section 10(a) below, may remove the System at the Association's cost.

   (c) Removal. Upon termination of this lease, the Association shall cause its members to remove the System and return the Property to Host in substantially the same condition as it existed prior to construction, except that the Association shall not be required to remove any equipment or improvements located underground. Such removal shall be completed within ninety (90) days following the expiration of the Term of this lease, during which time the Association shall be subject to all terms and conditions in this Lease with respect to access and said removal as if still a tenant.

3. Consideration. The Association agrees to pay Host an annual lease fee as specified in Exhibit C attached hereto.

4. Access. Host represents and warrants that the Site is accessible via public streets and existing drive over land of Landowner. Host hereby grants Association, its agents, employees and assigns, easements over, across, and through the Site for the Purpose, including, but not limited to, an easement for pedestrian and vehicular access the site from the public street and an easement to install, maintain, repair and replace such above and below ground utility lines and conduits as are reasonably necessary to achieve the Purpose. Host also acknowledges the System has broad agricultural farm benefits, plus additional community leadership and educational purposes, and reasonable access to the Site to fulfill these purposes shall be permitted. Notwithstanding its access rights to the Site, the Association agrees that it shall not otherwise unreasonably interfere with the use of the Property by the Host or the Trust.

   (a) Coordination of Access. Association's activities shall not unreasonably interfere with Host's and Trust's normal business activities, which include, but are not limited to, haying and farming related activity and the Parties will cooperate to establish reasonable policies and procedures to coordinate ongoing maintenance, repair and operation of the System required under the NEB Contract.

   (b) Solar Access. Host understands that unobstructed access to sunlight ("**Insolation**") is essential to Association's performance of its obligations and a material term of this Agreement. Host shall not in any way cause and, where possible, shall not in any way permit any interference with the System's Insolation.

5. System Ownership. The Association Members are the legal and beneficial owners of the System. The System shall at all times retain the legal status of personal property as defined under Article 9 of the Uniform Commercial Code, and shall not be deemed a part of, or fixture to, the Site. Host agrees that Association has the right to file a UCC-1 financing statement, a fixture filing or any other form of notice permitted by Law in the jurisdiction where the System is located confirming that Association owns the System. Host, as lessee of the Site, will obtain any necessary consent from the owner and confirm receipt of consent upon request of the Association.

6. System & Site Maintenance. The Association shall be responsible for maintenance of the solar equipment, including but not limited to the solar panels and their support structure, the inverter, the underground connection to the electricity grid, and related equipment. The Host shall be responsible for mowing around the System and maintaining reasonable access to it.

7. Estoppel and Subordination.

   (a) Estoppel. Host and Association each agree, within ten (10) days after a request by the other Party, to execute and deliver to the requesting party a statement, in writing, certifying (if such be the case) (i) that this Agreement is in full force and effect, (ii) the date of commencement of the Term, (iii) that there are no uncured defaults by the other Party or, if such defaults are claimed, stating the facts giving rise thereto, (iv) the Association and/or its members own the solar array as personal property and (v) other similar matters as may be reasonably requested by the other Party or its financing party, mortgagees or prospective mortgagees.

   (b) Subordination. Host represents to Association that the Site is not subject to any mortgages, deeds of trust, other security instruments conditions or restrictions (collectively, "**Superior Interests**") *other than those Host disclosed in writing prior to the Effective Date of this* Agreement. If Host desires to subject the Site to a Superior Interest after the Effective Date of this Agreement, Host shall notify the Association in advance in writing and shall obtain a non-disturbance agreement reasonably satisfactory to the Association from the holder of any such Superior Interest that shall provide that, in the event of any proceedings brought for the enforcement of any Superior Interest, the Association shall, upon demand by the Superior Interest holder but subject to the Association's rights of non-disturbance, attorn to and recognize such Superior Interest holder as Host under this Agreement. The Association acknowledges that this Agreement is subordinate to the Host's long-term ground lease and that the Agreement shall be subject to the terms and conditions of, and interpreted consistently with, the Host's long-term ground lease and any conflict in interpreting the terms of the two leases shall be resolved in favor of the underlying long-term ground lease.

7. Indemnification. To the fullest extent permitted by law, Host shall indemnify, defend, protect, save and hold harmless the Association, the Association's financing parties, and their respective affiliates, employees, officers, directors, members, partners, shareholders, agents, successors and assigns (the "**Association Parties**") from any and all third party claims, actions, costs, expenses (including reasonable attorneys' fees and expenses), damages, liabilities, penalties, losses, obligations, injuries, demands and liens of any kind or nature arising out of, connected with, relating to or resulting from (i) Host or Host's agents', representatives', vendors' or employees' actions, negligence, or willful misconduct or (ii) Host's failure to comply with any of the terms of this Agreement; provided, that nothing herein shall require Host to indemnify Association for its own gross negligence or willful misconduct. The provisions of this paragraph shall survive the termination or expiration of this Agreement.

8. Environmental Indemnification. Association is not liable for any past, present or future contamination or pollution or breach of environmental laws, if any, relating to the Site and the land beneath the Site. Accordingly, to the fullest extent permitted by law, Host agrees to assume full responsibility for and shall indemnify, defend and hold harmless the Association Parties from any and all liability or cleanup obligations for any contamination or pollution or breach of environmental laws related to the Site and the land below the Site, except to the extent deposited, spilled or otherwise directly caused by Association of any of its contractors or agents. The provisions of this paragraph shall survive the termination or expiration of this Agreement.

9. Limitation of Liability. WITH THE EXCEPTION OF THIRD PARTY CLAIMS ARISING UNDER SECTION 7, ANY CLAIMS ARISING UNDER SECTION 7 AND ANY CLAIM BASED ON THE FRAUD OR WILLFUL MISCONDUCT OF EITHER PARTY, NEITHER PARTY SHALL BE LIABLE TO THE OTHER FOR ANY INDIRECT OR PUNITIVE DAMAGES OF ANY CHARACTER, RESULTING FROM, ARISING OUT OF, IN CONNECTION WITH OR IN ANY WAY INCIDENT TO ANY ACT OR OMISSION OF EITHER PARTY RELATED TO THE PROVISIONS OF THIS AGREEMENT, IRRESPECTIVE OF WHETHER CLAIMS OR ACTIONS FOR SUCH DAMAGES ARE BASED UPON CONTRACT, WARRANTY, NEGLIGENCE (EXCEPT GROSS NEGLIGENCE), STRICT LIABILITY OR ANY OTHER THEORY AT LAW OR EQUITY.

10. Default. The occurrence of any of the following shall be an event of default under this Agreement (each, an "**Event of Default**"):

    (a) Failure to Perform Material Obligations. Failure of a Party to perform any material obligation under this Agreement and such failure continues for a period of fifteen (15) days from such Party's receipt of written notice from the other Party; provided, however, that if such failure to perform a material obligation is not capable of being cured within fifteen (15) days from receipt of written notice, then such period shall be extended, provided that the defaulting Party commences to cure such failure within thirty (30) days and thereafter diligently continues to cure such failure to completion.

    (b) Property Rights of Host. Host loses its right to occupy and use any portion of the Site and which the Association determines materially affects its property interest and intended purpose.

    (c) Default. The Association is in default under the NEB CONTRACT, after the expiration of any applicable notice periods and cure rights, if any.

    (d) Unauthorized Transfer by Host. Host assigns or transfers its rights and obligations under this Agreement in violation of s.12(a).

    (e) Bankruptcy Event. Either Party becomes insolvent or is a party to a bankruptcy, reorganization, insolvency, liquidation, receivership, dissolution, winding-up or relief of debtors, or any general assignment for the benefit of creditors or other similar arrangement or any event occurs or proceedings are taken in any jurisdiction with respect to the Party which has a similar effect.

    (f) Subordination. Host fails to comply with Section 6(b) of this Agreement.

11. Remedies. Upon the occurrence of an Event of Default by a Party, and the expiration of any applicable cure and notice periods, the non-defaulting Party may terminate this Agreement by providing written notice to the defaulting Party. Other than those damages exempted under Section 9, the prevailing party shall be entitled to recover any damages accruing as a result of default, including attorney fees and costs.

12. Assignment.

    (a) Assignment by Host. Host may not assign or transfer its rights and obligations under this Agreement without the Association's prior, written consent except for any transfer to a successor farmer of CSF or BTLT pursuant to the bylaws of the Association.

    (b) Assignment by Association. At any time during the Term of this Agreement the Association may sublease or license its rights hereunder to its Members without Host's consent or prior notice to Host. Any other assignment or sublease shall not be permitted without the prior written consent of the Host, which consent shall not be unreasonably withheld, delayed or conditioned.

    (c) Collateral Assignment by Association. The Association may, at any time during the term of this Agreement, without Host's consent and without having to provide notice to Host, mortgage, pledge or otherwise collaterally assign its interests in this Agreement and the System to a Financing Party (and in connection therewith, upon request, Host shall execute and deliver to Financing Party a consent to collateral assignment agreement or similar agreement); provided, however, that any such collateral assignee shall not be obligated to assume Association's obligations under this Agreement unless and until such collateral assignee shall foreclose or otherwise realize Association's obligations upon such collateral assignment; provided, further,

that any such assignment shall be subject to the terms of such consent to collateral assignment agreement.

13. Notices. Except as otherwise provided for herein, all notices or other communications under this Agreement shall be in writing and shall be delivered by (i) hand, or (ii) first-class mail, or (iii) recognized express courier, or (iv) email message, addressed as set forth on page 1 of this Agreement.

14. Voluntary Relocation by Host. Host, at Host's sole expense, shall have the right to cause the Facility to be relocated to a different location on the Site or at a different site altogether reasonably acceptable to the Association. Host shall be solely responsible to pay all capital and operating expenses, including any required recapture or repayment of renewable energy incentives and any lost revenues or energy during the period the system is inoperative, incurred to relocate the system pursuant to this Section. Any replacement system shall be designed to meet the requirements for shared ownership net metering, and shall produce at least as many kilowatt hours per year as the Facility it replaces.

15. Insurance Coverage. At all times during the Term, the Association shall maintain commercial general liability insurance with coverage of at least $1,000,000 per occurrence and $2,000,000 annual aggregate. The Association shall name Host and Trust as additional named insureds on the Association's liability insurance for the Facility.

16. Real Estate Property Taxes. The Parties acknowledge the Site currently is taxed by the Town of Brunswick as farmland, and will be reclassified to facilitate this project. The Association shall be responsible for any increase in real estate taxes on the underlying ground covered by this Agreement, above and beyond the taxes that would have been incurred by the Host (and the Trust) under the farmland classification. This shall include but not be limited to any taxes, interest and penalties associated with the reclassification of the Site and on-going incremental taxes levied as a result of this reclassification.

17. Miscellaneous.

    (a) Quiet Enjoyment. Host covenants and agrees that Association shall quietly enjoy the exercise of its rights hereunder without hindrance, disturbance or molestation from Host or any person claiming under Host

    (b) Governing Law. The Laws of the state of Maine shall govern this Agreement without giving effect to conflict or choice of laws principles.

    (c) Arbitration. The Parties shall attempt to amicably resolve any disputes arising from or relating to this Agreement. If the Parties are unable to amicably resolve a dispute within fifteen (15) days after the dispute arises, either Party may commence binding arbitration proceedings with the American Arbitration Association to be held in Portland, Maine. Judgment on an arbitrator's award may be entered in any court of competent jurisdiction. The prevailing party in any dispute arising out of this Agreement shall be entitled to reasonable attorneys' fees and costs. THE ARBITRATOR'S DECISION WILL BE FINAL AND BINDING, EXCEPT TO THE EXTENT IT IS SUBJECT TO REVIEW IN ACCORDANCE WITH APPLICABLE LAW GOVERNING ARBITRATION AWARDS.

    (d) No Waiver. Any failure of any Party to enforce any of the provisions of this Agreement or to require compliance with any of its terms at any time during the pendency of this Agreement shall in no way affect the validity of this Agreement, or any part hereof, and shall not be deemed a waiver of the right of such Party thereafter to enforce such provisions or require compliance with such terms.

    (e) No Liens. Host shall not suffer or permit the System to become subject to any lien, security interest or encumbrance for debt of any kind that may be owed by or demanded of Host.

    (f) Amendments. No change, amendment or modification of this Agreement shall be valid or binding upon the Parties hereto unless such change, amendment or modification shall be in writing and duly executed by both Parties.

(g) Entire Agreement. This Agreement contains the entire understanding of the Parties with respect to the subject matter hereof and supersedes any and all prior agreements and commitments with respect thereto. There are no oral or written understandings, terms or conditions, and neither Party has relied upon any representation, express or implied, not contained in this Agreement

(h) Counterparts. This Agreement may be signed in any number of counterparts and each counterpart shall represent a fully executed original as if signed by both Parties

(i) Severability. Any term or provision of this Agreement that is or becomes invalid or unenforceable in any situation in any jurisdiction shall not affect the validity or enforceability of the remaining term and provisions of this Agreement or the validity or enforceability of the offending term or provision in any other situation or in any other jurisdiction

(j) No Third Party Beneficiaries. Nothing in this Agreement shall provide any benefit to any third party (other than a Financing Party as set forth herein) or entitle any third party to any claim, cause of action, remedy or right of any kind.

(k) Survival. The provisions of this Agreement which by their nature are intended to survive the termination, cancellation, completion or expiration of this Agreement, including any express limitations of or releases from liability, shall continue as a valid and enforceable obligation of the Party notwithstanding any such termination, cancellation, completion or expiration.

(l) Successors and Assigns. Except as otherwise prescribed herein, this Agreement shall be binding upon and shall inure to the benefit of the Parties hereto and their permitted successors and assigns.

IN WITNESS WHEREOF, the Parties have executed this Agreement effective as of the date that the last Party signs this Agreement (the "**Effective Date**").

CRYSTAL SPRING FARM COMMUNITY SOLAR ASSOCIATION			SETH KROECK & MAURA BANNON	
Signature	STEVEN L WEEMS		Signature	SETH SETH KROECK MBannon Maura Bannon
Title President, CSF CSA	President CSFCSA		Title	Host
Date	April 20, 2016		Date	April 20, 2016

The Brunswick-Topsham Land Trust hereby joins in this Agreement for the sole purpose of confirming its consent to the Agreement as Owner of the Site and Landlord under the long term ground lease with Host and to acknowledge it will provide written notice to the Association in the event of any material default by Host arising under the long term ground lease which affects the Association's rights hereunder.

Brunswick-Topsham Land Trust

By: BRADLEY O. BABSON
Its: PRESIDENT

Exhibit A
Membership List of the
CRYSTAL SPRING FARM COMMUNITY SOLAR ASSOCIATION

Name:
Address:
Utility Account #
Percent Ownership:
Estimated Capacity (kW) and Annual Electrical Production (kWh)

Exhibit B
Property Description, System Location and System Design

Section B.01. Insert description of property, using description from Host's Deed

Section B.02. Insert description of system, to include Site Map, One Line Diagram, and Project Description

Exhibit C
Lease Payments

Section C.01. LEASE PAYMENTS

The Lease Payments to be paid by the Association to Host shall include the following compensation:

(1) Annual Lease Payments: The Annual Lease Payments to be paid by the Association to Host shall be $ 1.00.

(2) Billing: Lease Payments shall be payable annually and shall be due and payable by the Association to Host on or before thirty (30) days after the beginning of commercial operations of the System, and the annual anniversary of the commercial operations date thereafter. Host may charge a late fee equal to 1% of the amount due from the Association during any month or any fraction thereof that a Lease Payment is late.

Cara's Place LLC
109 Holland Drive
Phippsburg, ME 04562

Contacts:	Building/Site	Greenhouse
	Cecile Stadler	Kate Holcomb
	(207) 299-2068	(978) 821-3884
	cecile@tao-maine.com	kholco@gmail.com

July 5, 2016

Mr. Jared Woolston
Town of Brunswick
85 Union St
Brunswick, ME 04011

Re: Tao Yuan Greenhouse
22 Pleasant St & 0 Abbey Road
Tax Map U13-052

Dear Mr. Woolston

Attached please find an amended Major Development Review Final Plan Application. This plan was previously approved by the Planning Board and Village Review Board back in April 2015. At that time, use of the ground level was partially TBD. We now have developed plans for the entire building. A brief description of the project and its history is included below.

We are proposing the construction of a two-story building on the existing foundation at 0 Abbey Road, with minimal changes to the footprint on the lot. This project has been before the Planning Board many times in the past; the building with an aquaponics greenhouse on the top level, fish tanks and parking on the basement level, was approved in April 2015. Since then we have incorporated feedback from the Town and have fully defined the ground level space. This building will now not only house greenhouse production and administrative space associated with Tao Yuan restaurant, it will also have a small retail space and bakery/café on the Abbey Road side of the building (see attached drawings for layout).

The basement will include parking, storage and workspace; the first floor will be offices, a kitchen, and a store-front; and the second story will be an aquaponics greenhouse, designed to sustainably produce ecologically-grown food, year-round. The kitchen on the first floor will support the growing business of the restaurant as well as the Abbey Road café.

After our 2015 Staff Review and meeting with the Village Review Board, we are aware of the stipulations and requirements necessitated by this project and will address these specific points briefly here.

Snow removal on this structure and in this tight lot has been a concern. The greenhouse industry standard practice for snow removal is to heat the greenhouse enough to melt the snow as it hits, so as to prevent any build-up before it becomes an issue. As the goal in this case is actually heat loss, we would have the energy curtain disengaged during storms (and lights off at night time, so light escaping will not be an issue). During the inevitable intense storms that would occasionally outpace this method, staff will be on hand to manually remove snow when needed. Wide decks on the east and west sides can handle significant snow build-up; we have spoken to our engineers about snow load, and they confirm that structurally, this will not be an issue. Lastly, as we will be hiring someone for snow removal for the parking areas around the restaurant, if we need to include removal off these decks, we will do so as well.

Questions have been raised concerning noise, specifically in regards to fans on the greenhouse. While there will be vents on the north (condominium-facing) side, the fans will be on the south side, closest to Tao Yuan. This is so that the cooler air from the North will be drawn through the structure; this design answers to production best practices, energy efficiency, and noise concerns.

The lighting plans— including exterior lighting, greenhouse lighting, and light pollution control—is an ongoing investigation, and we will provide information on our fixtures, methods of lighting, and greenhouse curtain materials as needed. A photometric plan including specifications on exterior fixtures and an analysis by Sitelines, PA is included in this packet.

Parking will increase in two ways. By widening the parking lot between Tao Yuan and the new building and eliminating angled parking, we will add 1 space (this will also remove the need for the hazardous driveway between Tao Yuan and the Post Office). Furthermore, we will be adding spaces for staff parking in the basement. In total, this will increase parking capacity overall by 7+ spaces.

As we move this project forward, we will provide any information the town requires to demonstrate our follow-through on the aforementioned plans.

Thank you.

Sincerely,

Cecile Stadler
Cara's Place LLC

Included materials:

1. Letter from owner, 7/1/2016
2. Letter from architect, 6/14/2016
3. Major Review Application & Checklist, 6/14/2016
4. Zoning Ordinance Ch.5 Point-by-Point, 7/1/2016
5. Water District – Ability to serve letter, 2/24/2015
6. Sewer District – Ability to serve letter, 2/25/2015
7. Siteline site plan, revised 7/1/2016
8. Revised Architectural Drawings, 6/14/2016
9. Sketch-Up 3D renderings

Unless included above,
all previously submitted materials still apply.

June 14, 2016

Anna Breinich
Director of Planning and Development
28 Federal Street
Brunswick, ME 04011

RE: 0 Abbey Road
Tao Greenhouse
Village Review Board

Dear Ms Breinich,

Attached please find an application for consideration by the Village Review Board. The original application, dated march 3, 2015, has been modified to better fit with a more realized plan of the entire building.

Many aspects are similar, if not exactly the same. A two-story building is proposed to be constructed on top of an existing foundation at 0 Abbey Road. A geotechnical report was recently provided by Summit Engineering which will allow us design the structure around those findings.

The intent of this project remains the same as the original submission. The aim is to integrate form and function to create an attractive and interesting one-of-a kind building while demonstrating a new farm-to-table restaurant for urban settings. This low-impact greenhouse will supply Tau Yaun (and its sister restaurant in Portland, Bao Bao Dumpling House) with fresh, year-round produce.

The footprint of the foundation (approximately 55' x 60') will remain intact. The basement will include parking, storage, laundry, and the fish tanks for the hydroponics component of the greenhouse.

The first floor will include a commercial kitchen and an office to support the greenhouse spaces as well as the neighboring Tao Yaun Restaurant. The first floor will also contain a small retail space to sell homemade pastries, coffee, and wine that can be consumed inside or taken out for purchase. There are approximately 18 seats in the retail space. The site has been modified in this area to provide an ADA ramp, as well as stairs to the first floor level of the retail space.

The second floor will house the "rooftop farm" and will be glazed with transparent polycarbonate panels.

The design of the greenhouse building has been slightly modified as more of a transitional design. The greenhouse sits between 2 ½ story townhouses and the Tao Yaun Restaurant which faces Pleasant Street.

Existing townhouse structure

Existing Tao Yaun Restaurant

The existing design of the townhouses are traditional in nature, but with a more modern approach to its windows and busy façade treatments. The proposed

greenhouse design is a bridge between the residential nature of the townhouses and the commercial buildings along Pleasant Street. The attempt is to create a more contemporary approach to the building, to recognize its attempt to create a new idea of urban farming, and express that with more modern materials while still have a residential scale of its fenestration and its use of materials.

The glazing of the greenhouse is polycarbonate. The punched openings being proposed for the lower floors are Marvin Integrity fiberglass windows with simulated divided lites (interior and exterior muntins).

The doors to the retail space will be aluminum glass doors, while the doors to office will be half-glass.

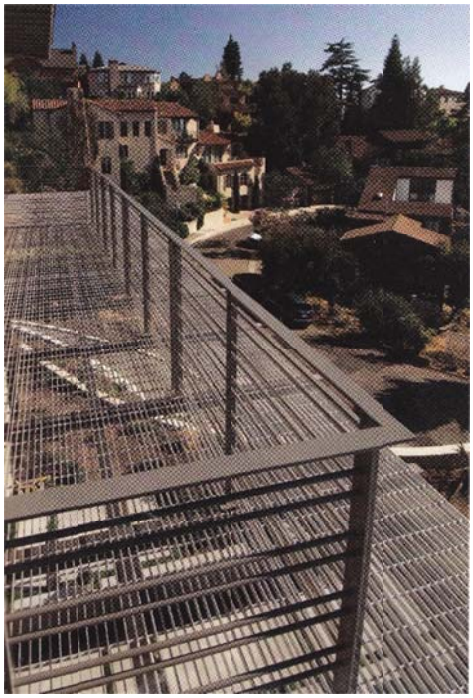

There is a metal grate walk around the perimeter of the greenhouse to provide the ability for maintenance. This is being treated to seem "light" and see-through, and with the use of metal provide a more contemporary nature to the building.

The same railing is being proposed at the new ADA ramp and stairs to help tie building and site together with consistency.

The walkway is supported by curved metal brackets that evoke the curved nature of the greenhouse arch structure. These same curved brackets also support the thin roof structures over each of the doors to provide protection from the elements at the openings.

The roof that covers the entrance to the retail center highlights the corner of the building as it wraps around to the south façade to provide shading for the south facing windows. It also helps define the only public entrance to the building.

Also on the south façade is a line of PV solar panels, situated to not interfere with the greenhouse windows. It is hoped that solar panels will help offset the electrical use of the building, but is not sufficient to offset all of the electrical use.

The siding is broken into two horizontal bands. Fiber cement lap siding (clapboards) by Hardie is a durable siding that looks like wood clapboards, and comes pre-finished. Under this is a shiplap siding by Hardie that has a smoother face and provides a texture change to create a more linear façade that helps ground the greenhouse structure.

All trim will be Boral. Boral is a recycled poly-ash product that does not hold moisture so the paint will last a very long time. The product cuts, attaches, and looks like wood trim. Unlike PVC trim, it does not move nearly as much and has the visual characteristics of painted wood.

It is with excitement that we present this proposal to the Village Review Board. As you know, this project has been on the boards for some time, but it is much closer to realization now and, as you can see, the entire building is proposed to be utilized.

Please feel free to contact me with questions.

Thank you,

Sincerely,

David Matero, AIA, LEED AP
Principal
david@davidmatero.com
207.671.6820

orig submitted 4/1/2015
revised 6/14/2016

MAJOR DEVELOPMENT REVIEW
FINAL PLAN APPLICATION

1. Project Name: Tao Yuan Greenhouse Project at 0 Abbey Road

2. Project Applicant
   Name: Cecile Stadler / Cara's Place LLC
   Address: 109 Holland Dr., Phippsburg, ME 04562
   Phone Number: cecile@tao-yuan.me | 207 299-2068 cell | 207 389-2162 home

3. Authorized Representative
   Name: Greg Simard / General Contractor
   Address: PO Box 942, Brunswick, ME 04011-0942
   Phone Number: buildergreg@comcast.net | 207 751-9995 cell

4. List of Design Consultants. Indicate the registration number, address and phone number Of any engineer, surveyor, architect, landscape architect or planner used:

   1. Architect: David Matero, 100 Front St., Bath | 671-6820
   2. Engineer: Michael Cunningham, LIncoln/Haney Engineering, 6 Federal St., Brunswick | 729-1061
   3. Surveyor: Sitelines, PA, 8 Cumberland, Brunswick, ME | 725-1200

5. Physical location of property being affected: 0 Abbey Rd / 22 Pleasant St., Brunswick, ME 04011

6. Lot Size: 0.36 acres (0.20 tao + 0.16 lot)

7. Zoning District: TC1

8. Indicate the interest of the applicant in the property and abutting property. For example, is the applicant the owner of the property and abutting property? If not, who owns the property subject to this application? We are the owners of the property.

9. Assessor's Tax Map U13 Lot Number 052 of subject property.

10. Brief Description of proposed: _____

11. Describe Specific Physical Improvements to be Done: _____

Owner Signature: _____

Applicant Signature (*if different*): _____

Required Attachments (by Applicant):
- Final Plan Check List
- Final Plan Requirements for Open Space Developments (if applicable)
- Request for Waivers (if applicable)
- Required Copies of Final Plan

Required Attachment (by Planning and Development Department):
- Listing of all owners of property within 200-foot radius of property under review.

FINAL PLAN REQUIREMENTS

Key: "O" = omit; "S"=submit; "NA"=not applicable; "W" = waiver P=pending

Item	O	S	NA	W	P	**Comments**
Name of Development		✔				
Scale, date, north point, area, number of lots (if subdivision)		✔				
Boundaries of all lots and tracts with accurate distances and bearings, locations of all permanent monuments property identified as existing or proposed.		✔				
Certification by a professional land surveyor that the land has been surveyed and the boundaries established in accordance with the State of Maine Board of Licensure for Professional Surveyors standards for Category 1 (Standard Boundary Survey), conditions 1, 2, or 3.		✔				
Existing zoning district and overlay designation.		✔				
Names of engineer and surveyor; and professional registration numbers of those who prepared the plan.		✔				
Names of current owner(s) of subject parcel and abutting parcels.		✔				
Name, location, width of paving and rights-of-way, profile, cross-section dimensions, curve radii of existing and proposed streets; profiles of center-lines of proposed streets, at a horizontal scale of 1" equals 50' and vertical scale of 1 inch equals 5 feet, with all elevations referred to in U.S.G.S. datum.				✔		no new streets are being proposed
A general road plan noting circulation, direction, traffic control devices, street lighting and type of lighting proposed.		✔				
Existing and proposed easements associated with the development.		✔				
Kind, location, profile and cross-section of all proposed drainage facilities, both within the development and outside of it, and a storm-water management plan which includes the submission requirements listed in the storm-water management checklist available in the Planning Department.		✔				
Location of features, natural and artificial, such as water bodies, wetlands, streams, vegetation, railroads, ditches and buildings.		✔				

Location of existing and proposed utilities; water, sewer, electrical lines, and profiles of underground facilities. Tentative locations of any private wells.		✔				
Existing and proposed location, size, profile and cross section of sanitary sewers; description, plan and location of other means of sewage disposal with evidence of soil suitability.		✔				
Topography with counter intervals of not more than 2 feet.				✔		
A Class A (high intensity) Soil Survey prepared in accordance with the standards of the Maine Association of Professional Soil Scientists.			✔			site all impervious
Location of all existing trees over 10 inches in diameter, locations of tree stands, and a plan showing all trees to removed as a result of the development proposal.			✔			
Lighting plan showing details of all proposed lighting and the location of that lighting in relation to the site.		✔				
Existing locations and proposed locations, widths and profiles of sidewalks.		✔				
Location map.		✔				
Approximate locations and dimensions of proposed parking areas.		✔				
Proposed ownership and approximate location and dimensions of open spaces for conservation and recreation.		✔				
Grading, erosion control, and landscaping plan; proposed finished grades, slopes, swells, and ground cover or other means of stabilization.		✔				
Reference to special conditions stipulated by the Planning Board, with conditions either set forth in full or on the plan or identified as specific documents filed with the Board.			✔			
A wetlands map drawn by a specialist delineating wetland boundaries in accordance with the methods prescribed by the US Army Corps of Engineers.			✔			
Dedicated public open specs, areas protected by conservation easements, and existing and proposed open spaces or recreation areas.			✔			

For Open Space Development, a note indicating the total permitted lot count of the entire land tract based upon the destiny standards in this Ordinance, the number of lots created by the Plan, and the numebr of lots permitted to be subdivided in the future, as well as a table showing setback requirements and impervious surface coverage limits for each lot.			✔			
Building envelops showing acceptable locations for principal and accessory structures.		✔				

FINAL PLAN/SUPPORTING DOCCUMENTS

Key: "O" = omit; "S"=submit; "NA"=not applicable; "W" = waiver P=pending

Item	O	S	NA	W	P	**Comments**
Documentation of Ownership or contract.		✔				
Drafts of legal documents appropriate to the application, including: deeds, easements, conservation easements, deed restrictions or covenants, home/property owners association declarations and by-laws, and such other agreements or documents as are necessary to show the manner in which conservation land will be owned, maintained, and protected.		✔				
Draft performance guarantee or conditional agreement.			✔			
Disclosure of any required permits from the Department of Environmental Protection, Marine Resources, US Army Corps of Engineers, Department of Inland Fisheries and Wildlife, or other agencies, as applicable; or, if a permit has already been granted, a copy of that permit.		✔				We may require a permit from Dept of Inland Fisheries and Wildlife to stock fish for our system
Any additional studies required by the Planning Baord, which are deemed necessary in accordance with this Ordiancne.			✔			
Storm water management program for the propsed project prepared by a professional engineer.		✔				
A storm water management checklist prepared by the Cumebrland County Soil and Water Conservation District made availabel at the Brunswick Department of Planning and Development.	✔					

An erosion and sedimentation control checklist prepared by the Cumberland County Soil and Water Conservation District.	✔					
A statement from the Brunswick-Topsham Water District of conditions under which water will be provided.		✔				
A statement from the Brunswick-Topsham Water District of its review and comments on the proposed use if the project involves development within the Aquifer Protection Zone.			✔			
A Statement from the Fire Chief recommending the number, size, and location of hydrants, available pressure levels, road layout and street and project name, and any other fire protection measures to be taken.			✔			
A statement from the Superintendent of the Brunswick Sewer District of the conditions under wich the Sewer Disticit wil provide sewerage disposal service and approval of the santiary sewers proposed within the development.		✔				
Where a septic system is to be used, evidence of soil suitablity.			✔			
All applicable materials necessary for the reviewing entity to review the propsoal in accordance with the Criteria of Section 411.		✔				
A plan of all buildings with new construction or expansion of an existing facility, including type, size, and footprint, floor layout, setback, elevation of first floor slab, storage, and loading areas.		✔				
An elevation view of all sides of each building proposed indicating height, color, bulk, surface treatment, and signage.		✔				
A circulation plan describing all pedestrian and vehicle traffic flow on surrounding road systems.		✔				
The size and proposed location of water supply and sewage disposal systems.		✔				
A site landscaping plan indicating grade change, vegetation to be preserved, new plantings used to stabilize areas of cut and fill, screening, the size, location and purpose and type of vegetation.		✔				

CHAPTER FIVE: DEVELOPMENT REVIEW PLAN STANDARDS

501 PRESERVATION OF NATURAL FEATURES AND NET SITE AREA

501.1 Natural Features

n/a

501.2 Net Site Area

n/a

502 FLOOD HAZARD AREAS

n/a

503 STEEP SLOPES & EMBANKMENTS

n/a

504 STORM WATER MANAGEMENT

A stormwater management assessment has been done by Sitelines (please see attached letter) and has found that existing drains are suitable for the proposed structure.

505 GROUNDWATER

This building will have no adverse affect on groundwater quality. All agricultural activities will follow organic, pesticide-free guidelines. Furthermore, as the vast majority of the water in the aquaponics system will be recirculating, we'll employ filtration systems in order to reuse water continuously.

506 EROSION AND SEDIMENTATION

100% impervious surfaces allowed on site.

507 SEWAGE DISPOSAL

507.1 Municipal Sewer

See attached willingness and ability to serve letter from the Brunswick Sewer District.

508 WATER SYSTEMS

508.1 Public Water System

See attached willingness and ability to serve letter from the Brunswick-Topsham Water District.

509 COMMUNITY FACILITIES IMPACT ANALYSIS

509.1 Impact Analysis

A. See attached letter from the Brunswick Sewer District.
B. See attached letter from the Brunswick-Topsham Water District.
C. n/a
D. n/a
E. n/a
F. Solid waste removal will be shared with Tao Yuan restaurant; we will continue to use a private company's services.
G. See attached letter from Sitelines.
H. n/a
I. n/a

509.2 Demographic Description

n/a

510 DEVELOPMENT IMPACT FEES

Our previous major application review process did not diagnose any potential negative impacts on any municipal infrastructure. This building will have minimal impact on public systems.

511 DEVELOPMENT OF NEW STREETS

No new streets are being proposed.

512 OFF-STREET PARKING

This revised plan will increase parking capacity of the site by 7+ spaces.

Although we are building only on the Abbey Road location, it is our understanding that the Planning Board will be considering the parking plan for the entire lot (which includes Tao Yuan restaurant). Therefore, there are retail, office, warehouse, and restaurant standards at play-- the property does not fit neatly into any one category. However, our design intends to treat these businesses as complimentary-- sharing staff and infrastructure is fundamental to our plan. Throughout our design, we have strived to "balance the provision of adequate parking for the project under review while minimizing the development of visible paved areas" as laid out in the town zoning ordinance. As such, we have added significant staff parking in the basement of the proposed structure, which will serve employees of the new building as well as Tao Yuan restaurant. Furthermore, very few additional staff members will be added to the existing roster for the combined businesses, as the majority of operations will be run by current Tao Yuan employees.

It is important to note that Tao Yuan operates from 5pm to 9pm/10m Tuesday through Saturday. The proposed retail space, Bloom, will offer fresh baked goods, coffee, and wine to consume in-house and to

sell, will operate from 8am to 6pm. There is only an hour overlap between the restaurant and retail space.

Per Brunswick Zoning Ordinance, the proposed project would require the following:

Retail or Business use: 4 spaces per 1,000 sf of floor area and 1 space for every 4 seats: 900 sf = 4 parking spaces + 18 seats / 4 = 5 parking spaces for a total of 9 parking spaces.

Industrial / Warehouse (Greenhouse) use: 2 spaces per 1,000 sf of floor area: 2,530 sf = 3 parking spaces

Office use: 3 spaces per 1,000 sf of floor area: 573 sf = 2 parking spaces

The office and greenhouse do not add parking to the site, those spaces have shared employees with Tao Yuan. 5 parking spaces would be required and at a minimum, 6 parking spaces are being added in the basement.

The proposed retail space is the true addition of parking to the site. Requiring a total of 9 parking spaces, there are 10 parking spaces available on site and an abundance of parking available on the street and in public parking lots.

In reviewing our parking plan, the Board should consider the following unique features of this site and our proposed project:

- In this downtown area, we expect many customers and staff to bicycle or walk; we are adding a bike rack to the site and we will maintain pedestrian-friendly sidewalks and crosswalks in our plan.
- The site is within walking distance of public transit such as the Brunswick train station and the Brunswick Explorer.
- There is on-street parking all along Pleasant Street
- There exist multiple parking lots within a short distance of this site. The public lot on Abbey Road near the fire station has 79 spots of either 2 hour or all day parking (see image below).
- Tao Yuan restaurant is open for dinner only, after 5 pm. At that time, surrounding buildings (such as the post office, town library, area churches, and the Brunswick business center) are no longer open and there is ample parking available-- totalling over 150 additional spots-- vastly more than our need (see image below).

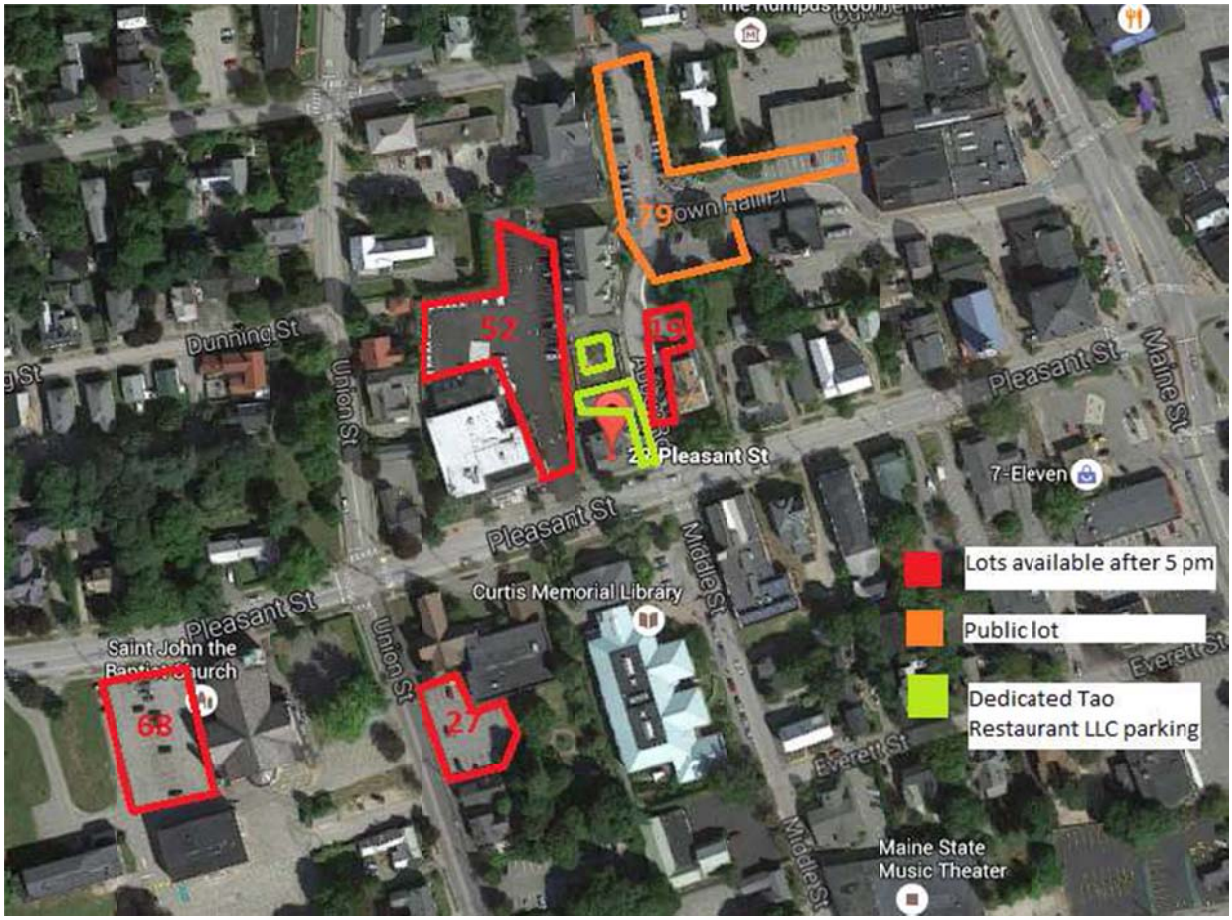

512.3 Design of Parking Areas

We meet all standards for parking location and screening. There will be no parking on the street-facing side of the building. All exterior parking is in an existing parking area (between Tao Yuan and the new structure) and is simply being reconfigured for increased capacity. The additional staff parking we are adding will be completely hidden from view, in the garage.

512.4 Construction of Parking Areas

Parking areas will be paved.

512.5 Bicycle and Pedestrian Access and Circulation

A. We are including a bike rack to serve staff as well as customers of both Tao Yuan and the new retail space.
B. Sidewalks and crosswalks are shown on the site plan.
C. n/a

512.6 Parking Plan Alternatives

See above discussion and image for parking alternatives.

513 CURB CUTS AND HIGHWAY ACCESS

n/a

514 OFF STREET LOADING REQUIREMENTS

Deliveries for the retail and kitchen space will be on a similar scale to those which Tao Yuan already receives. After construction is complete and equipment is on site, the greenhouse will not require any ongoing deliveries or out-loading, as Tao Yuan will be the primary customer. Therefore requirements for off street loading will not change.

515 APPEARANCE ASSESSMENT

This project has previously been approved by the VRB. With the recent design improvements (requiring us to return to both the VRB and Planning Board), we will be re-applying for our Certificate of Appropriateness at the July 19th meeting.

516 BUILDING CONFIGURATION

The building is oriented to face Abbey Road.

517 PRESERVATION OF HISTORIC RESOURCES

n/a

518 ACCESS FOR PERSONS WITH DISABILITIES

Our architect, David Matero Architecture, has ensured that the structure is ADA compliant, including a ramp entrance and an ADA bathroom. A set of stairs and an ADA compliant ramp will be added to allow ADA access to the retail space.

519 RECREATIONAL REQUIREMENTS FOR RESIDENTIAL DEVELOPMENTS

n/a

520 FISCAL CAPACITY

Building construction will be financed approximately a third from restaurant cash flow, a third from existing funds, and the remainder as needed from a 350K+ line of credit secured by the restaurant buildings and income. We have had preliminary meetings with Bank of America about this loan. They are the ones who gave us this number based on income, current bank account balances, and collateral assets. As needed, relevant financial statements can be provided.

521 PERFORMANCE GUARANTEE

n/a

522 HOMEOWNERS/PROPERTY OWNERS ASSOCIATIONS

n/a -- There is an existing agreement with Terrace Place Condominiums for shared plowing of the parking entrance.

523 [MOVED TO SECTION 308]

524 NOISE AND DUST

Construction will comply with the town noise ordinance schedules and dust mitigation procedures.

BRUNSWICK & TOPSHAM
WATER DISTRICT

PO Box 489
Topsham, Maine 04086
Telephone (207) 729-9956
Fax (207) 725-6470

Alan J. Frasier, PE
General Manager

Craig W. Douglas, PE
District Engineer

Daniel O. Knowles, CPA
Director of Finance and
Data Management Systems

William G. Alexander, Jr.
Operations Manager

February 24, 2015

Kate Holcomb
22 Pleasant Street
Brunswick, ME 04011
Via email: kholco@gmail.com

RE: 0 Abby Ln (behind 22 Pleasant St), Brunswick, Maine

Dear Ms. Holcomb:

This letter is to inform you that the District has the ability to serve the referenced project, and will provide service in accordance with Maine Public Utilities Commission and Brunswick & Topsham Water District Rules and Regulations.

We understand that you will be adding a new building at 0 Abby Ln with a couple of wash closets and some small commercial water use. The District has the ability to adequately serve this establishment with a 1-inch domestic service that will need to be installed by the customer to the main on Abby Ln. At this time there are no fire service requirements.

The District requires the customer or its authorized agent to make application for service for all new service and meter installation requests. An application form can be found on our website www.btwater.org.

Feel free to contact me if you have any questions.

Sincerely,

Craig Douglas PE
District Engineer

Brunswick Sewer District

10 PINE TREE ROAD
BRUNSWICK, MAINE 04011
TELEPHONE (207) 729-0148 bsd@brunswicksewer.org FAX (207) 729-0149

February 25, 2015

Kate Holcomb
22 Pleasant Street
Brunswick, Maine 04011

Re: Willingness and Capacity to Serve

Dear Kate,

This letter is in response to your request for an "ability to serve" letter regarding construction of a new Building at 0 Abbey Road/22 Pleasant Street in Brunswick, Maine. Through our discussions I understand that you are going to construct a two story building, including basement work space, first story commercial/office space, and a second story aquaponics greenhouse on the property.

I have reviewed the material provided and conclude that the project as proposed will not adversely affect facilities of the District. **The Brunswick Sewer District (BSD) has both the willingness and capacity to serve the proposed project.**

An entrance charge permit for the property was obtained in September of 2007. From your description of the project, the new construction will have similar flow as the previously permitted use, therefor your project is covered under the existing permit (BSD Permit # 1130). District personnel will need to be notified for inspection prior to connecting to the existing sewer. There is no charge for inspection services. More information about our entrance charge program can be found at http://www.brunswicksewer.org/ecp.html#6.

If you have any questions or need additional information, please do not hesitate to contact me.

Sincerely,

Robert A. Pontau Jr., PE
Assistant General Manager
rpontau@brunswicksewer.org

CC: Darcy Dutton, Administration, Brunswick Sewer District
Wes Wharff, Supervisor, Brunswick Sewer District

SURVEY NOTES:

1.) THE EXCHANGE OF DEEDS IN 1910 BETWEEN ROBERTSON AND EATON APPEARS TO HAVE CREATED THE PRESENT TERRACE PLACE, LLC EAST LINE. THE LAND ON THE WEST SIDE OF THIS LINE APPEARS TO HAVE BEEN OCCUPIED BY TERRACE PLACE, LLC OR THEIR PREDECESSORS IN TITLE FOR MANY YEARS (MOST LIKELY FROM 1910 DEED EXCHANGE). THE TERRACE PLACE, LLC CHAIN OF TITLE SINCE 1910 HAS INCLUDED LANGUAGE THAT "THE GRANTOR ALSO CONVEYS BY THIS DEED ALL RIGHT, TITLE AND INTEREST, IF ANY, IN AND TO SAID TWO-ROD STRIP".

2.) TIE TO MAINE STATE GRID IS BASED ON SURVEY BY OTHERS AND HAS NOT BEEN INDEPENDENTLY VERIFIED.

3.) THIS IS LOCATION OF 2 ROD RIGHT OF WAY DESCRIBED IN DEEDS. NO SPECIFIC GRANT OF RIGHT OF WAY TO TOWN OF BRUNSWICK WAS FOUND, BUT A TRAVELED WAY FROM PLEASANT STREET TO TOWN LOT HAS LONG EXISTED.

4.) SEVERAL IRON PIPES AND MONUMENTS WERE FOUND ON THE NORTH SIDE OF PLEASANT STREET BETWEEN MAINE AND UNION STREET. THE ROAD LINE SHOWN ON THIS SURVEY IS BASED ON A BEST FIT LINE THROUGH SAID POINTS.

5.) ELEVATIONS ARE N.G.V.D. AND DETERMINED BY TIES TO SURVEYS BY OTHERS. SAID ELEVATION SYSTEM HAS NOT BEEN INDEPENDENTLY VERIFIED BY THIS SURVEYOR.

6.) SEE DEEDS TO TERRACE PLACE, LLC BK 22222 PG 265 DATED 1-11-2003

7.) THE FOOTPRINT OF THE GREENHOUSE & OFFICE BUILDING SHOWN ON THIS PLAN IS AT THE GROUND/PARKING LEVEL.

8.) SEE INDENTURE BETWEEN TOWN OF BRUNSWICK, TERRACE PLACE, LLC AND BOULAY PROPERTIES, LLC. SAID INDENTURE CONCERNS THE PROPOSED USE AND LOCATION OF THE ACCESS DRIVE WHICH IS TO SERVE THE PROPERTIES SHOWN HEREON.

SITE PLAN NOTES:

1. OWNER OF RECORD:

CARA'S PLACE, LLC: BK 29359, PG 114 & BK 29359, PG 117

2. AREA INFORMATION:

15,467 SQ. FT. (0.36 ACRES)

3. TAX MAP REFERENCE:

TAX MAP U13, LOT 52 & PART OF 95.

4. ZONING: TC1 (TOWN CENTER – MAINE STREET) & VILLAGE REVIEW

MIN. LOT AREA	N/A
MAX. DENSITY	N/A
MIN. LOT WIDTH	N/A
MIN. YARD	N/A (FRONT, SIDE & REAR)
MAX. IMPERVIOUS	100%
MAX. BUILD. HEIGHT	40 FT.
MAX. BUILD. FOOTPRINT	30,000 S.F.

5. SITE TABULATIONS:

EXISTING LOT SIZE:	15,467 S.F. (0.36 ACRES)
TOTAL LANDSCAPE:	2,362 S.F.
TOTAL IMPERVIOUS	13,105 S.F. (84.7%)

6 EROSION CONTROL:

THE DISTURBED AREAS OF THE SITE WILL BE ISOLATED THROUGH THE USE OF SEDIMENT BARRIER, CATCH BASIN INLET PROTECTION, AND OTHER MEASURES TO MINIMIZE THE TRANSPORT OF SEDIMENT FROM THE SITE. THE CONTRACTOR SHALL INCORPORATE BEST MANAGEMENT PRACTICES AS OUTLINED IN THE MAINE EROSION AND SEDIMENT CONTROL BMP'S AS PUBLISHED BY THE MAINE DEPARTMENT OF ENVIRONMENTAL CONTROL, CURRENT EDITION. SPECIFIC PROVISIONS FOR TEMPORARY EROSION CONTROL METHODS INCLUDE SILTSACK CATCH BASIN INLET PROTECTION, SILTSOXX SEDIMENT BARRIER, AND GOOD HOUSEKEEPING SUCH AS REGULAR SWEEPING OF THE SITE. THE CONTRACTOR WILL BE BOUND TO MEET THE PERFORMANCE STANDARDS OF THE BMP'S INCLUDING EROSION CONTROL, STABILIZATION, MAINTENANCE, AND INSPECTION REQUIREMENTS. PERMANENT STABILIZATION INCLUDES PAVEMENT AND ESTABLISHMENT OF VEGETATIVE COVER WHERE SHOWN.

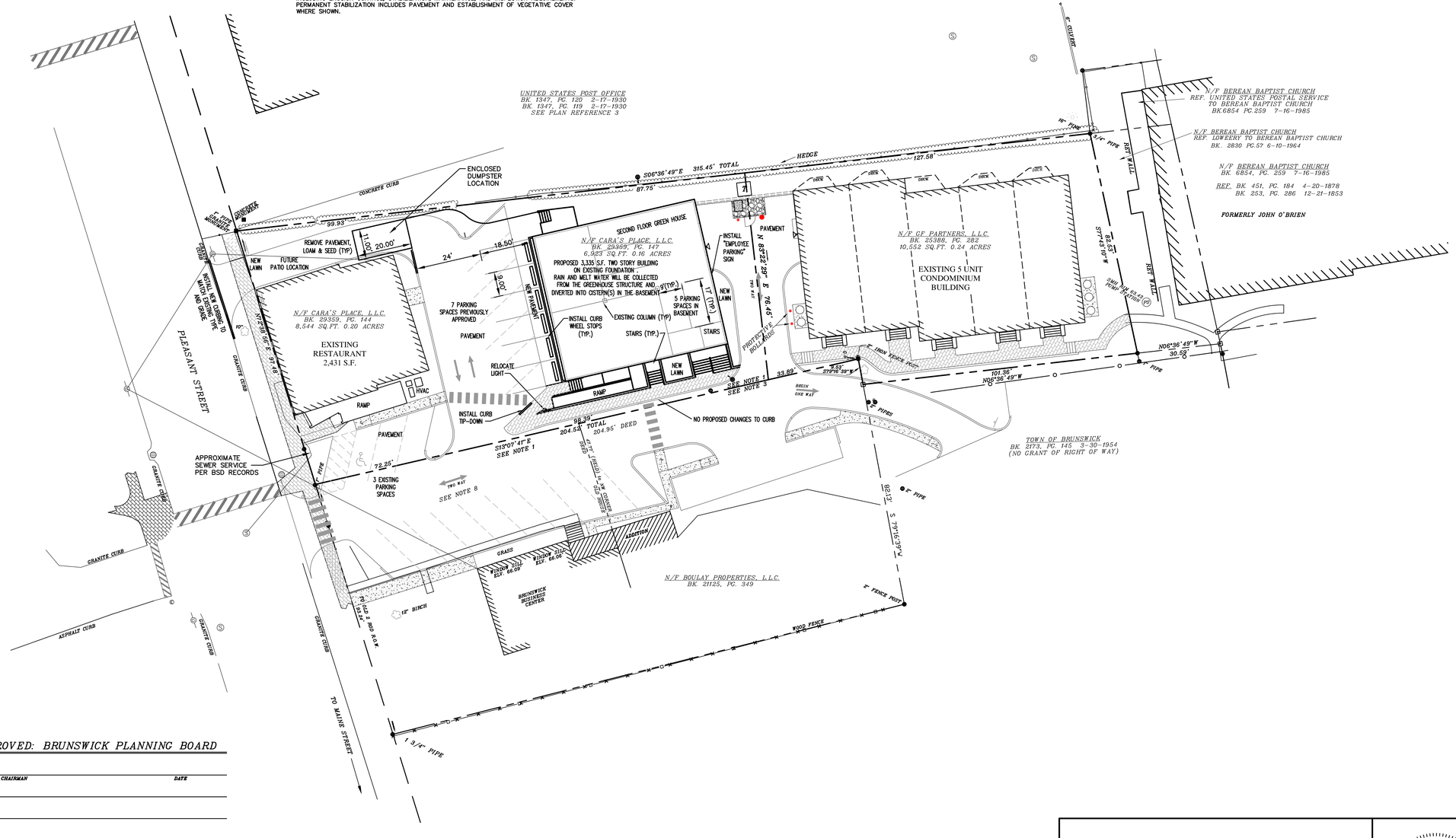

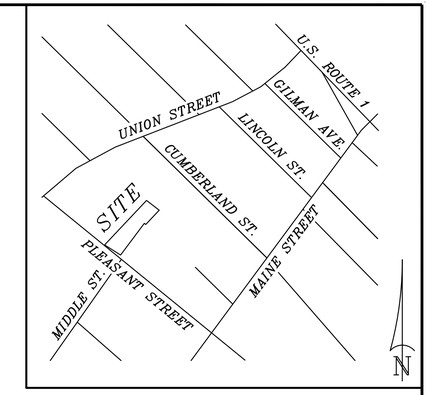

LOCATION MAP
NOT TO SCALE

LEGEND

■	MONUMENT FOUND
●	IRON MARKER FOUND
○	5/8" REBAR TOPPED WITH AN ALUMINUM CAP READING "BRUCE W. MARTINSON – PLS 2137" TO BE SET
	BOUNDARY LINE OF SURVEYED PARCEL
	BOUNDARY LINE OF ABUTTERS (APPROX.)
	ROAD RIGHT OF WAY LINE (APPROX.)
	COMPUTATIONAL TIE LINE
	STONE WALL (APPROX.)
	EDGE OF TRAVELED WAY
OHE	UTILITY LINE
CMP 13	UTILITY POLE WITH NUMBER
IPF	IRON PIPE FOUND
IRF	IRON ROD FOUND
DH	DRILL HOLE
△ 4	ARBITRARY TRAVERSE POINT WITH NUMBER
12, 1001	ARBITRARY COMPUTATIONAL POINT NUMBER
BK 10674, PG 197	DEED BOOK & PAGE IN COUNTY REGISTRY OF DEEDS
PB 195, PG 130	PLAN BOOK & PAGE IN COUNTY REGISTRY OF DEEDS
R/W	RIGHT OF WAY
N/F	NOW OR FORMERLY HELD BY
AC.	ACRES
±	MORE OR LESS
Ⓢ	SEWER MANHOLE
☼	LIGHT POLE
▦	CATCH BASIN
	WATER SHUT OFF
	HYDRANT
	SIGN
	WATER VALVE
	ELEVATION TEMPORARY BENCH MARK
	TEST PIT

6.	07-01-16	REVISED PER CLIENTS CHANGES	RPL
5.	04-29-15	REVISED PER TOWN COMMENTS	RPL
4.	03-31-15	REVISED DUMPSTER, DECK, AREA CALCS, AND LAYOUT	RPL
3.	03-03-15	ADDED GREENHOUSE BUILDING ON EXISTING FOUNDATION	KPC
2.	05-22-14	REVISED PER SRC COMMENTS	KPC
1.	04-22-14	SUBMITTED TO PLANNER	KPC

APPROVED: BRUNSWICK PLANNING BOARD

CHAIRMAN DATE

TITLE:
SITE DEVELOPMENT PLAN

PROJECT:
22-24 PLEASANT STREET
BRUNSWICK, MAINE 04011

OWNER:
CARA'S PLACE, LLC
109 HOLLAND DRIVE, PHIPPSBURG, MAINE 04562

GRAPHIC SCALE
20 0 10 20 40 80
(IN FEET)
1 inch = 20 ft.

STATE OF MAINE
CURTIS Y. NEUFELD
9779
LICENSED
PROFESSIONAL ENGINEER

SITELINES, PA
ENGINEERS • PLANNERS • SURVEYORS
LANDSCAPE ARCHITECTS
8 CUMBERLAND STREET, BRUNSWICK, ME 04011
207.725.1200 www.sitelinespa.com

FIELD WK: BBS	SCALE: 1" = 20'	SHEET: 1
DRN BY: RPL	JOB #: 2225	
CH'D BY: BBS/KPC	MAP/LOT:	
DATE: 04-07-2014	FILE: 2225-CONCEPT	

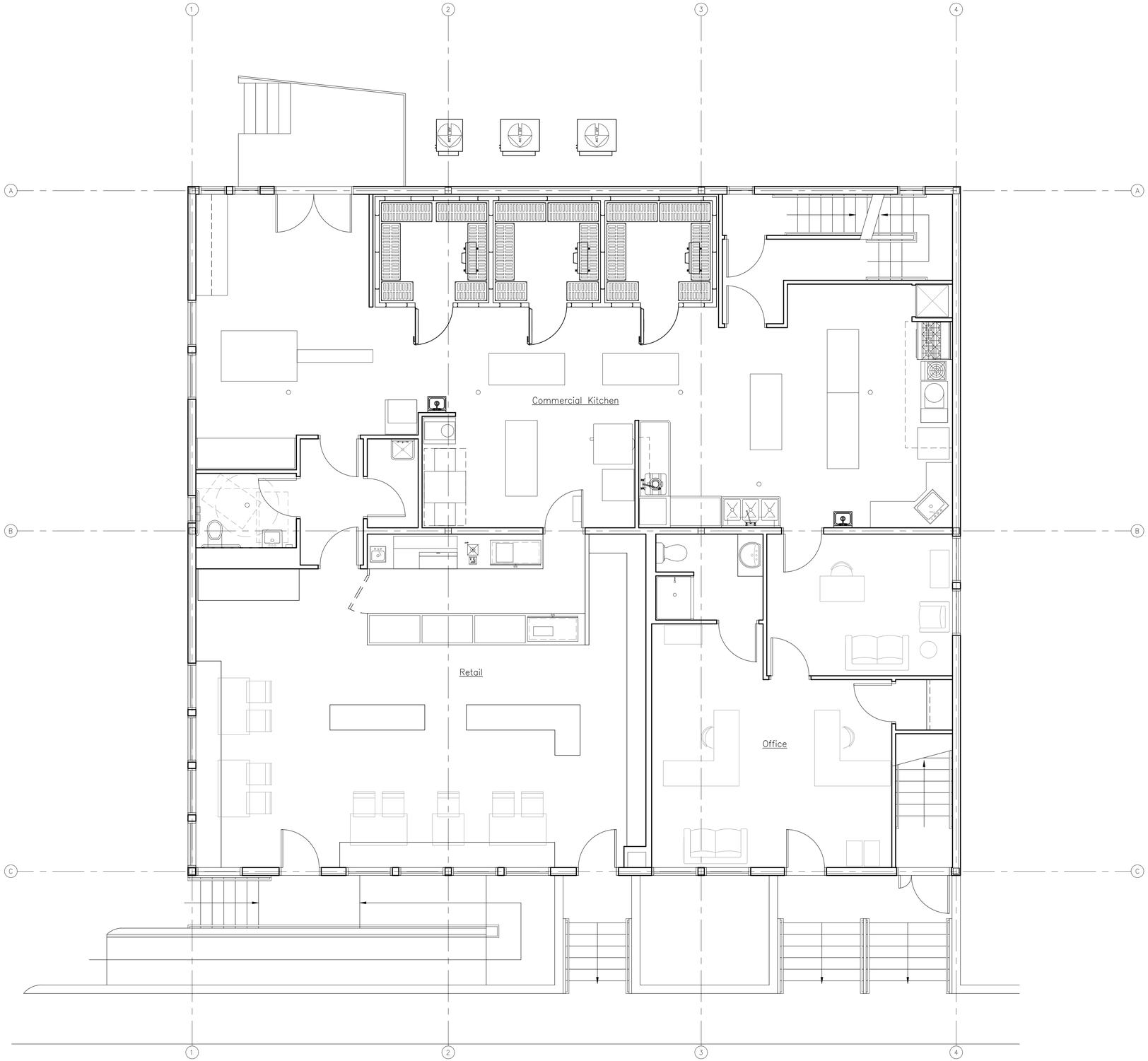

1 First Floor Plan

Scale: 1/4" 1'-0"

David Matero
Architecture

100 Front Street
Suite 40
Bath, Maine 04530
207.671.6820
david@davidmatero.com

Plan N

Consultants

Lincoln / Haney
Structural Engineer

Casco Bay Engineering
Greenhouse Structure

Revisions

.

Tao Yuan Greenhouse

0 Abbey Road
Brunswick, Maine

LICENSED ARCHITECT
DAVID S. MATERO
No. 2705
STATE OF MAINE

Job Number: 15.026
Date: 07.01.16
Scale: 1/4" = 1'-0"

Drawing Title:

Proposed First Floor Plan

A1.1

Village Review Board

Copyright 2016 David Matero Architecture, LLC

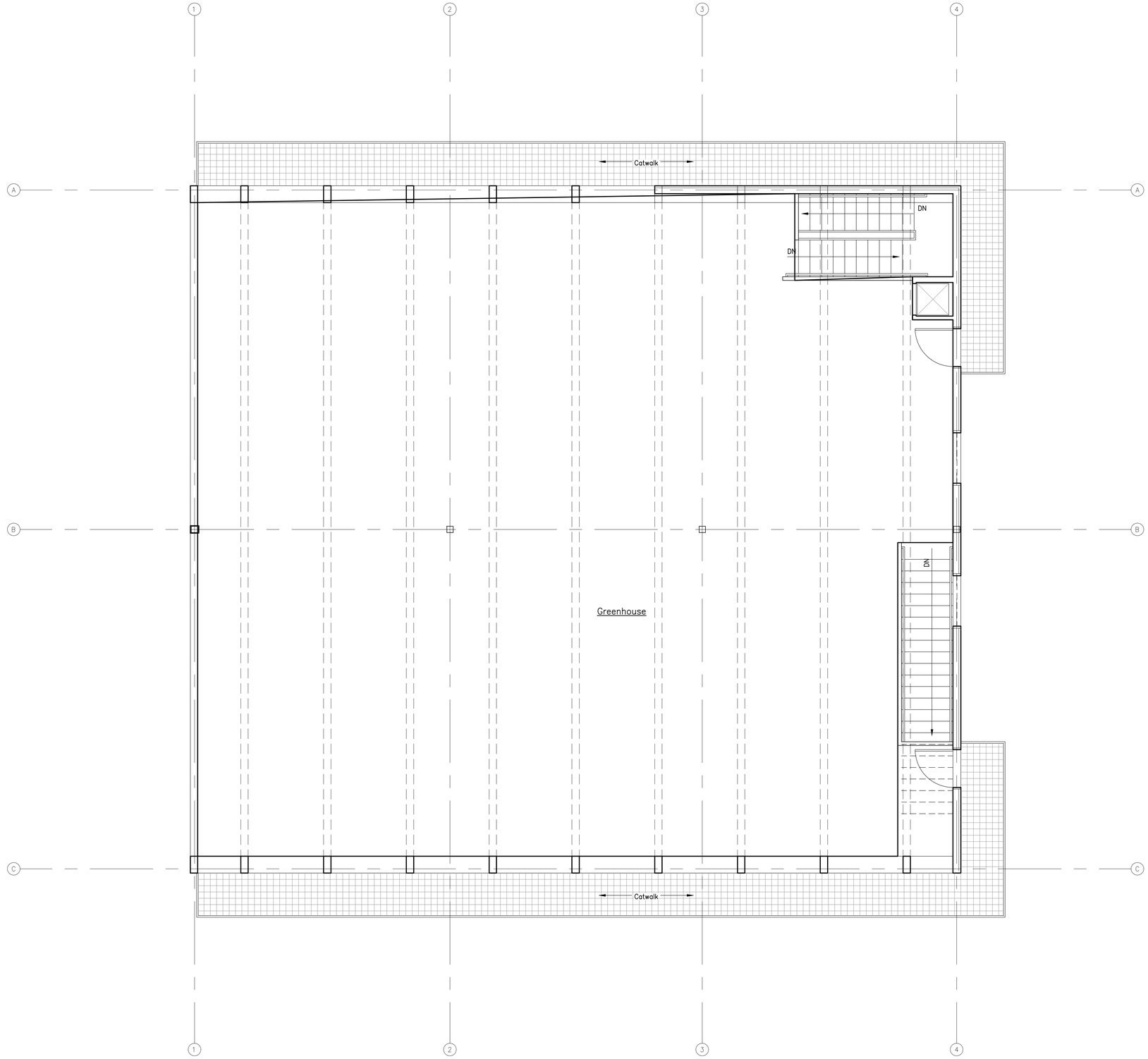

1 Greenhouse Plan

Scale: 1/4" 1'-0"

David Matero
Architecture

100 Front Street
Suite 40
Bath, Maine 04530
207.671.6820
david@davidmatero.com

Plan
N

Consultants

Lincoln / Haney
Structural Engineer

Casco Bay Engineering
Greenhouse Structure

Revisions

.

Tao Yuan
Greenhouse

0 Abbey Road
Brunswick, Maine

LICENSED ARCHITECT
DAVID S. MATERO
No. 2705
STATE OF MAINE

Job Number: 15.026
Date: 07.01.16
Scale: 1/4" = 1'-0"

Drawing Title:

Proposed Greenhouse Plan

A1.2

Village Review Board

Copyright 2016 David Matero Architecture, LLC

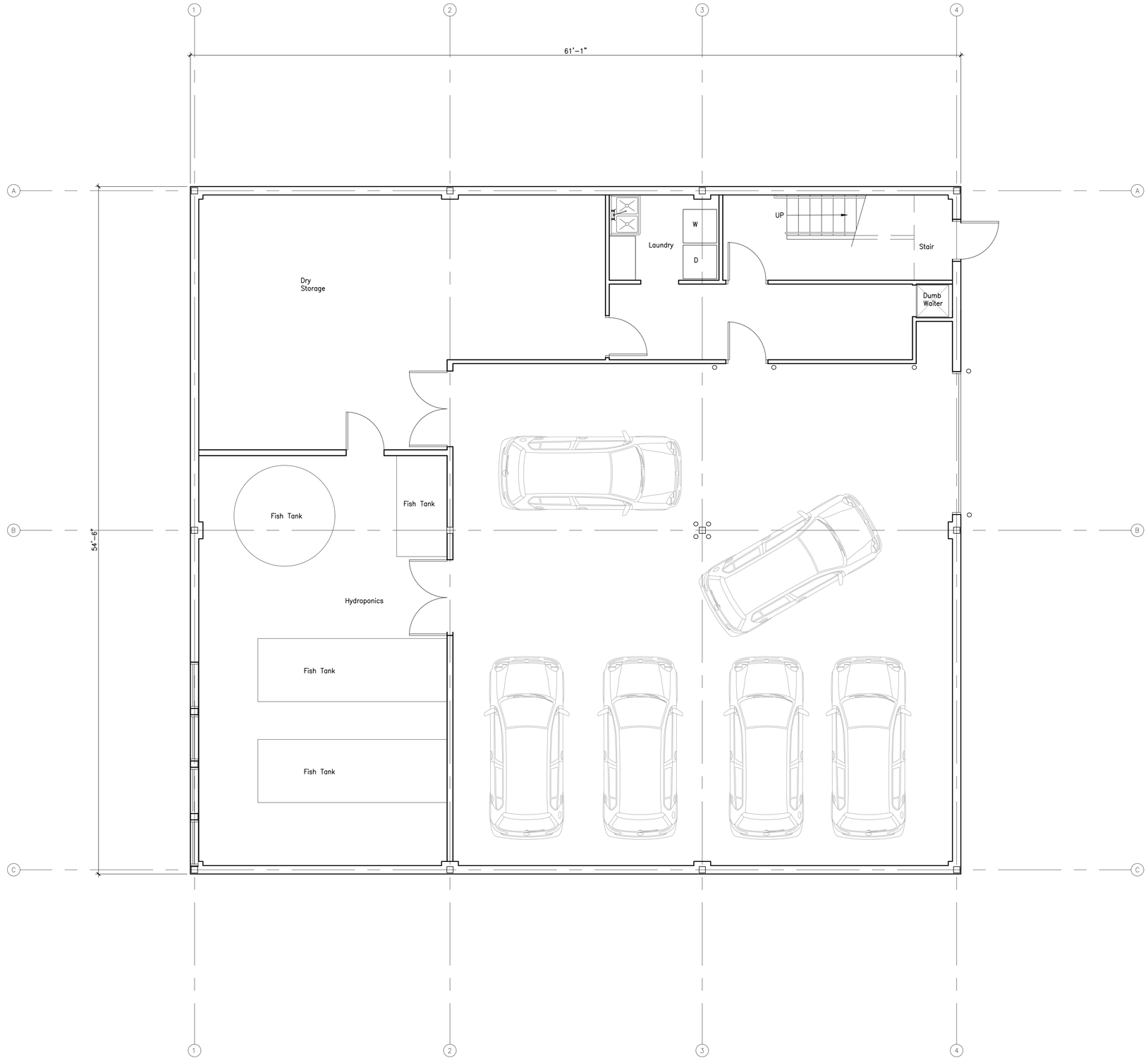

1 Basement Plan

Scale: 1/4" 1'-0"

David Matero
Architecture

100 Front Street
Suite 40
Bath, Maine 04530
207.671.6820
david@davidmatero.com

Plan
N

Consultants

Lincoln / Haney
Structural Engineer

Casco Bay Engineering
Greenhouse Structure

Revisions

.

Tao Yuan Greenhouse

0 Abbey Road
Brunswick, Maine

LICENSED ARCHITECT
DAVID S. MATERO
No. 2705
STATE OF MAINE

Job Number: 15.026
Date: 07.01.16
Scale: 1/4" = 1'-0"

Drawing Title:

Proposed Basement Plan

A1.3

Village Review Board

Copyright 2016 David Matero Architecture, LLC

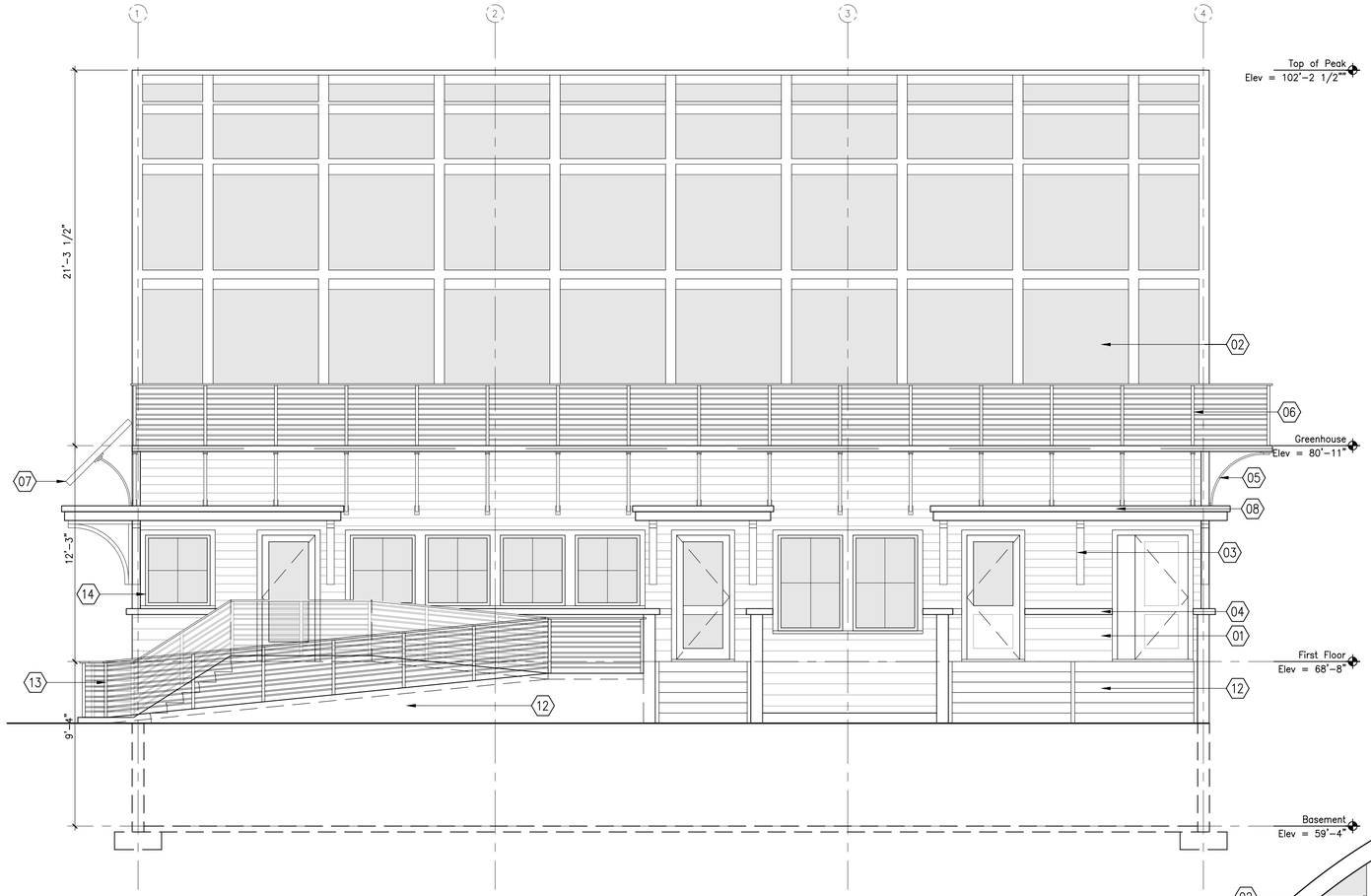

2 East Elevation

Scale: 1/4" 1'-0"

Elevation Legend

01. 1x6 Shiplap fiber-cement siding, prefinished
02. Fabricated greenhouse assembly
03. Fiber-cement lap siding – prefinished
04. PVC trim
05. Bent metal structural tube supports bolted to fixed metal brackets
06. Fabricated metal catwalk system
07. Fabricated solar panels
08. Roof with painted Boral trim and wood brackets
09. Mechanical louver with internal screen
10. Concrete exposed foundation
11. Roll up garage door
12. Concrete stairs and ramp
13. Metal railing – Black
14. Aluminum clad wood casement window with check rail
15. Kitchen Exhaust Fan

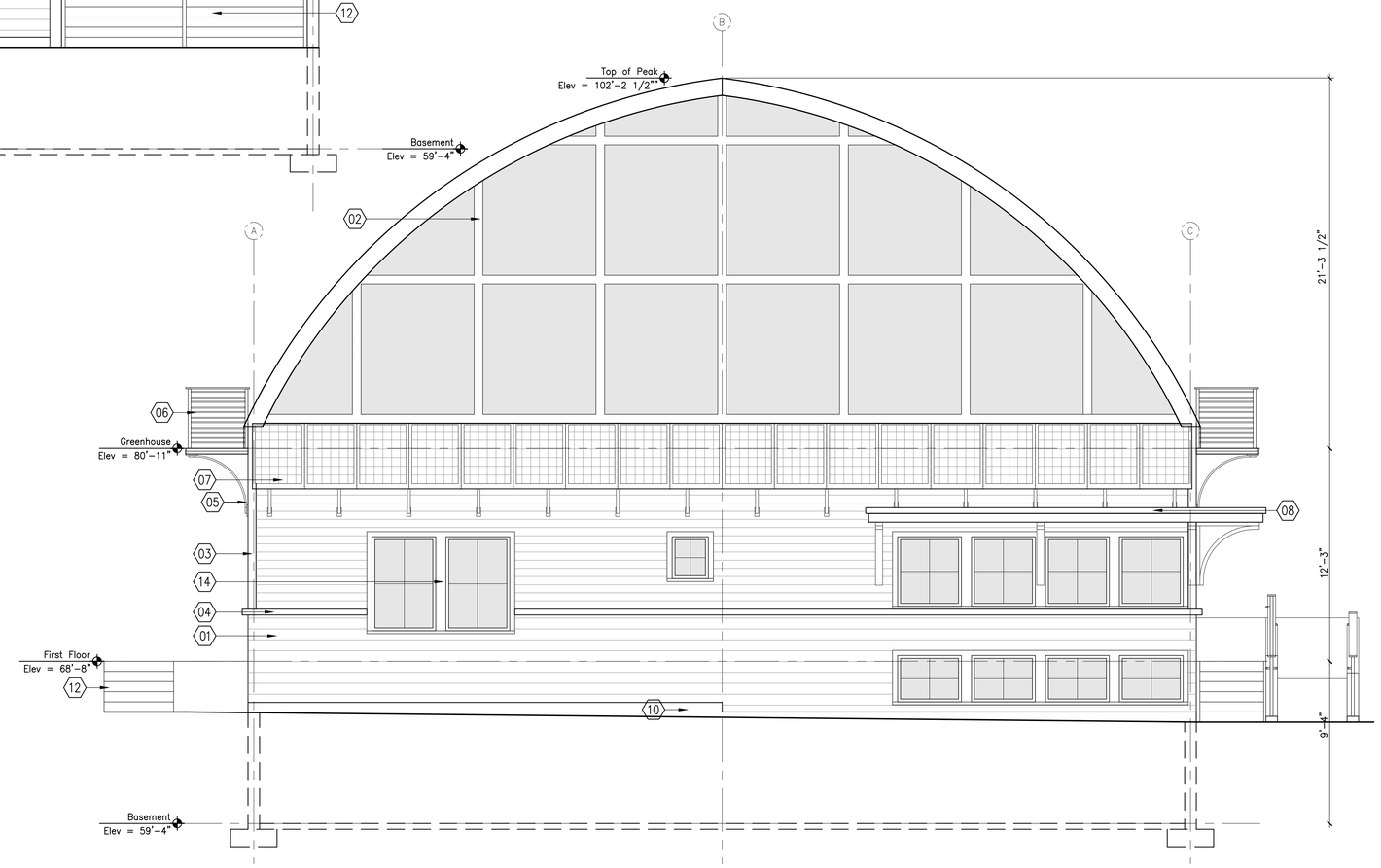

1 South Elevation

Scale: 1/4" 1'-0"

David Matero
Architecture

100 Front Street
Suite 40
Bath, Maine 04530
207.671.6820
david@davidmatero.com

Plan
N

Consultants

Lincoln / Haney
Structural Engineer

Casco Bay Engineering
Greenhouse Structure

Revisions

.

Tao Yuan Greenhouse

0 Abbey Road
Brunswick, Maine

Job Number: 15.026
Date: 07.01.16
Scale: 1/4 " = 1'-0"

Drawing Title:

Proposed South & East Elevations

A2.1

Village Review Board

Copyright 2016 David Matero Architecture, LLC

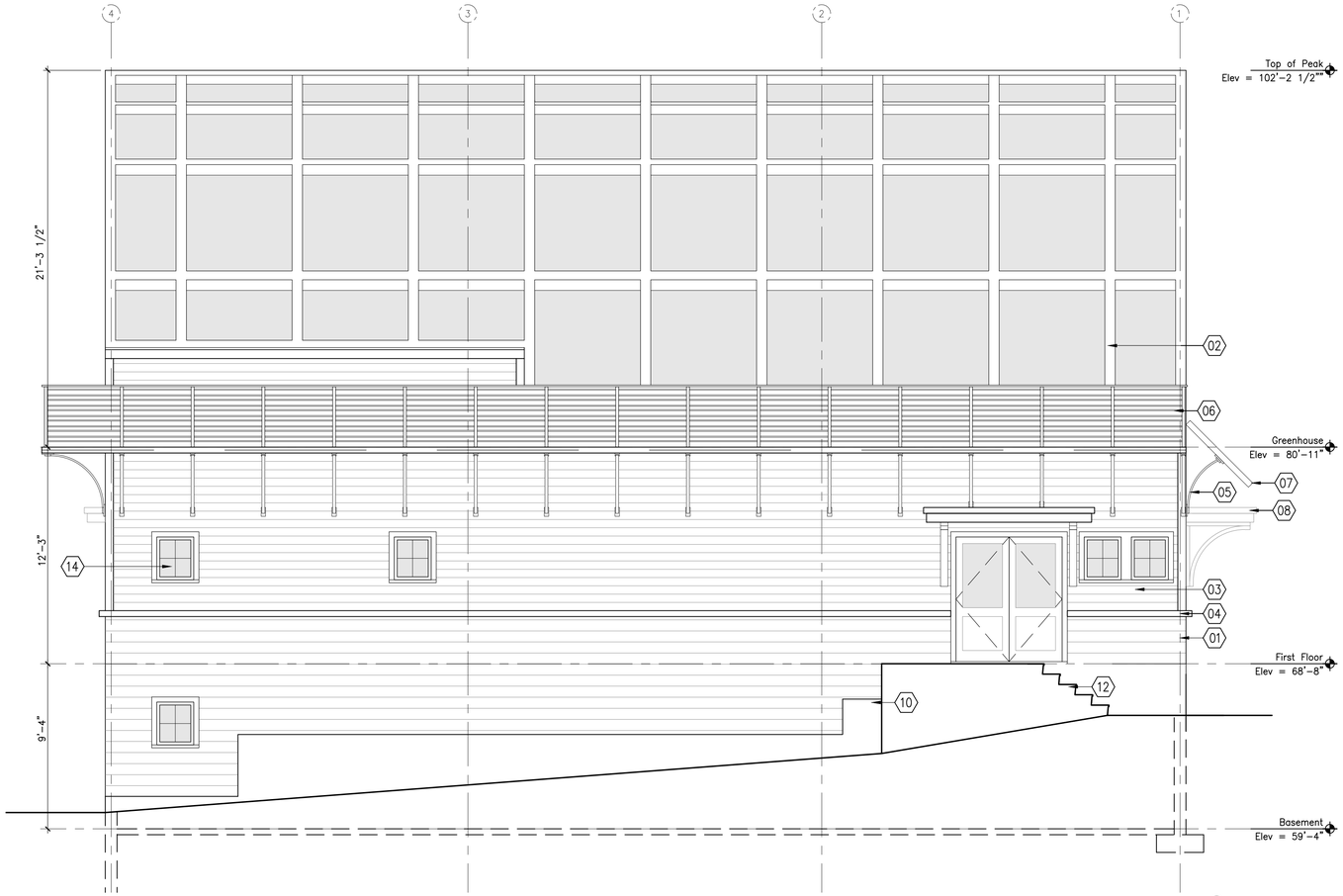

4 West Elevation

Scale: 1/4" 1'-0"

Elevation Legend

01. 1x6 Shiplap fiber-cement siding, prefinished
02. Fabricated greenhouse assembly
03. Fiber-cement lap siding – prefinished
04. PVC trim
05. Bent metal structural tube supports bolted to fixed metal brackets
06. Fabricated metal catwalk system
07. Fabricated solar panels
08. Roof with painted Boral trim and wood brackets
09. Mechanical louver with internal screen
10. Concrete exposed foundation
11. Roll up garage door
12. Concrete stairs and ramp
13. Metal railing – Black
14. Aluminum clad wood casement window with check rail
15. Kitchen Exhaust Fan

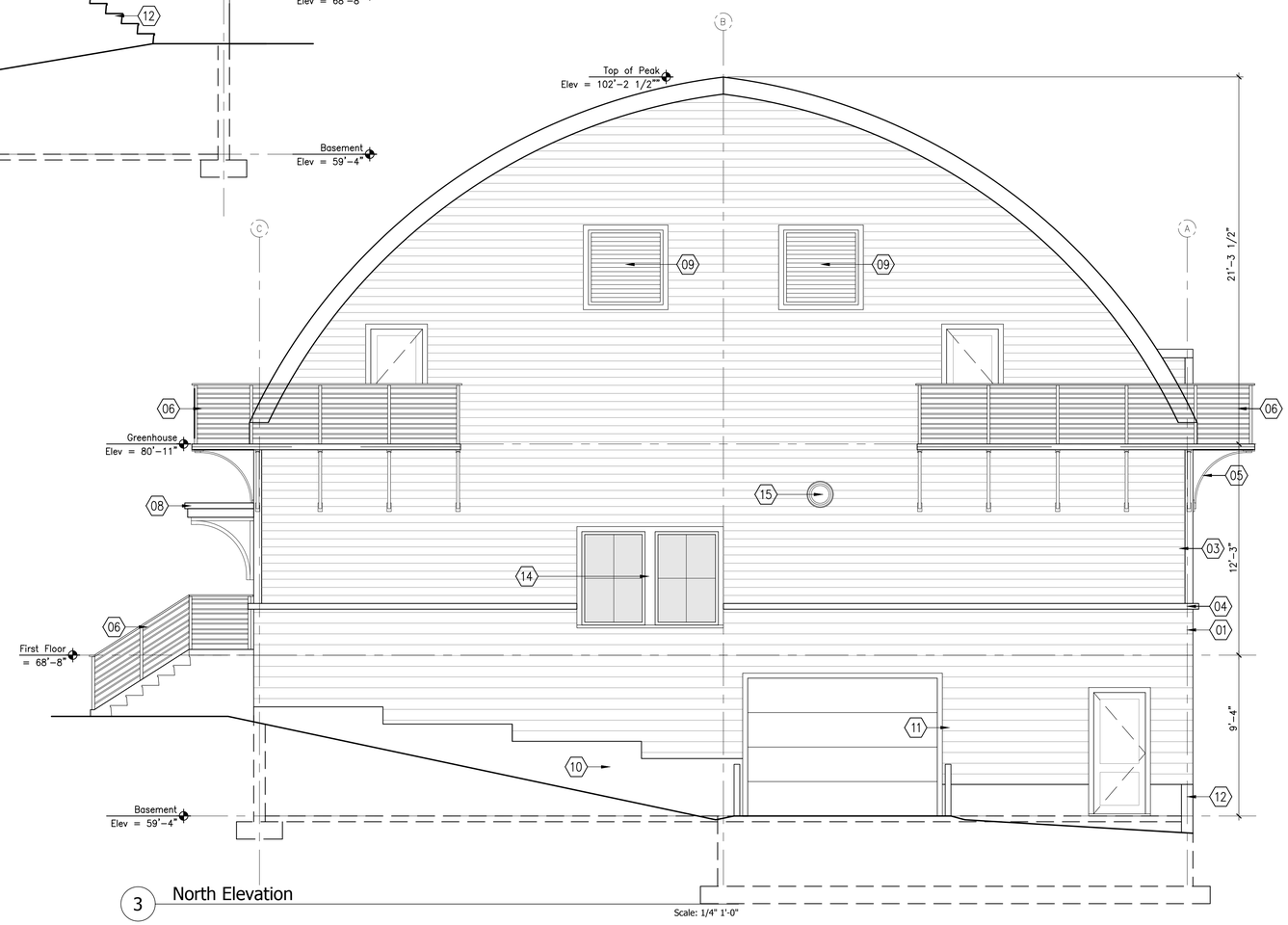

3 North Elevation

Scale: 1/4" 1'-0"

David Matero
Architecture

100 Front Street
Suite 40
Bath, Maine 04530
207.671.6820
david@davidmatero.com

Plan
N

Consultants

Lincoln / Haney
Structural Engineer

Casco Bay Engineering
Greenhouse Structure

Revisions

.

Tao Yuan Greenhouse

0 Abbey Road
Brunswick, Maine

Job Number: 15.026
Date: 07.01.16
Scale: 1/4 " = 1'-0"

Drawing Title:

Proposed North & West Elevations

A2.2

Village Review Board

Copyright 2016 David Matero Architecture, LLC

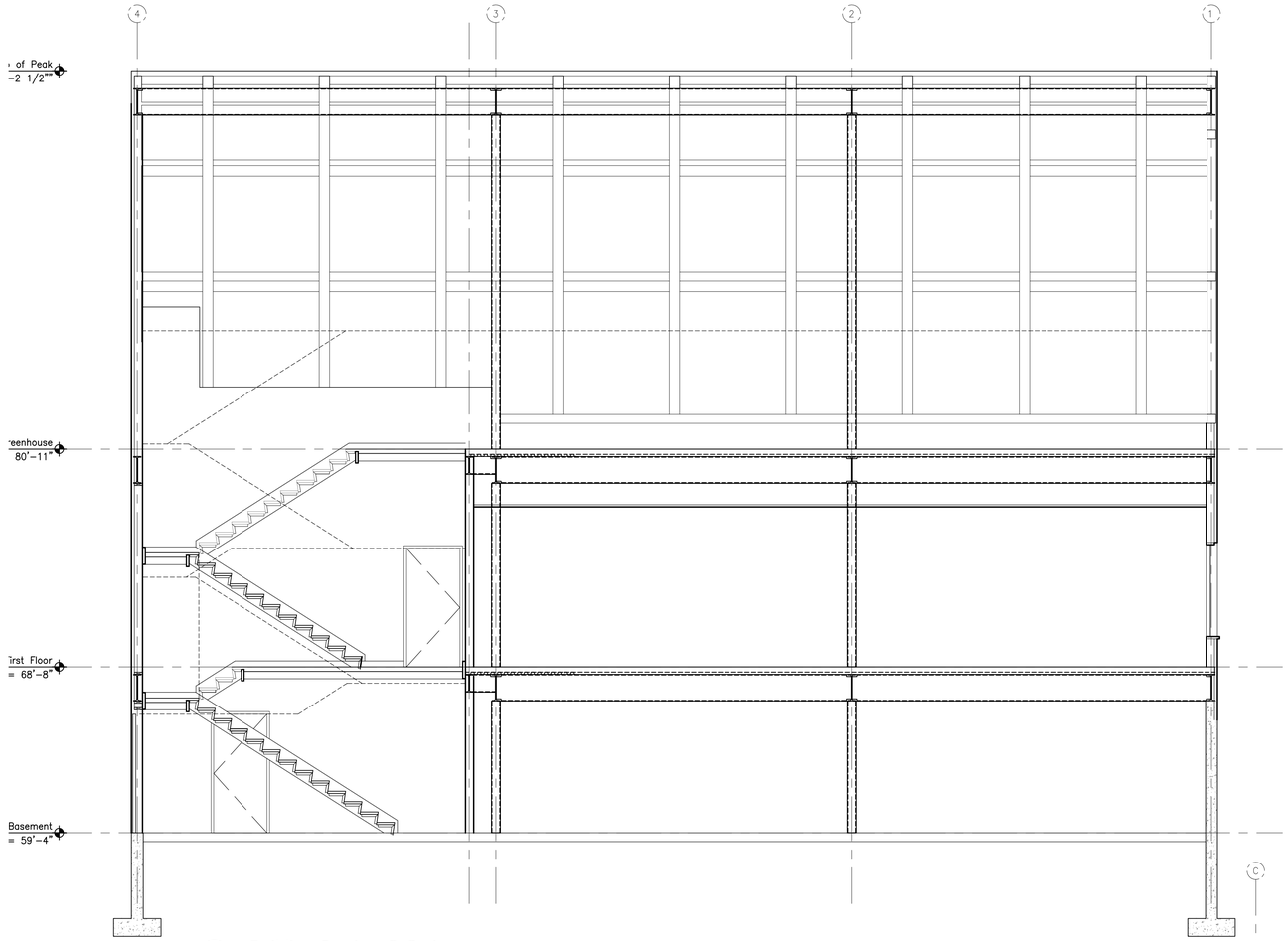

2 Building Section @ Stairs

Scale: 1/4" 1'-0"

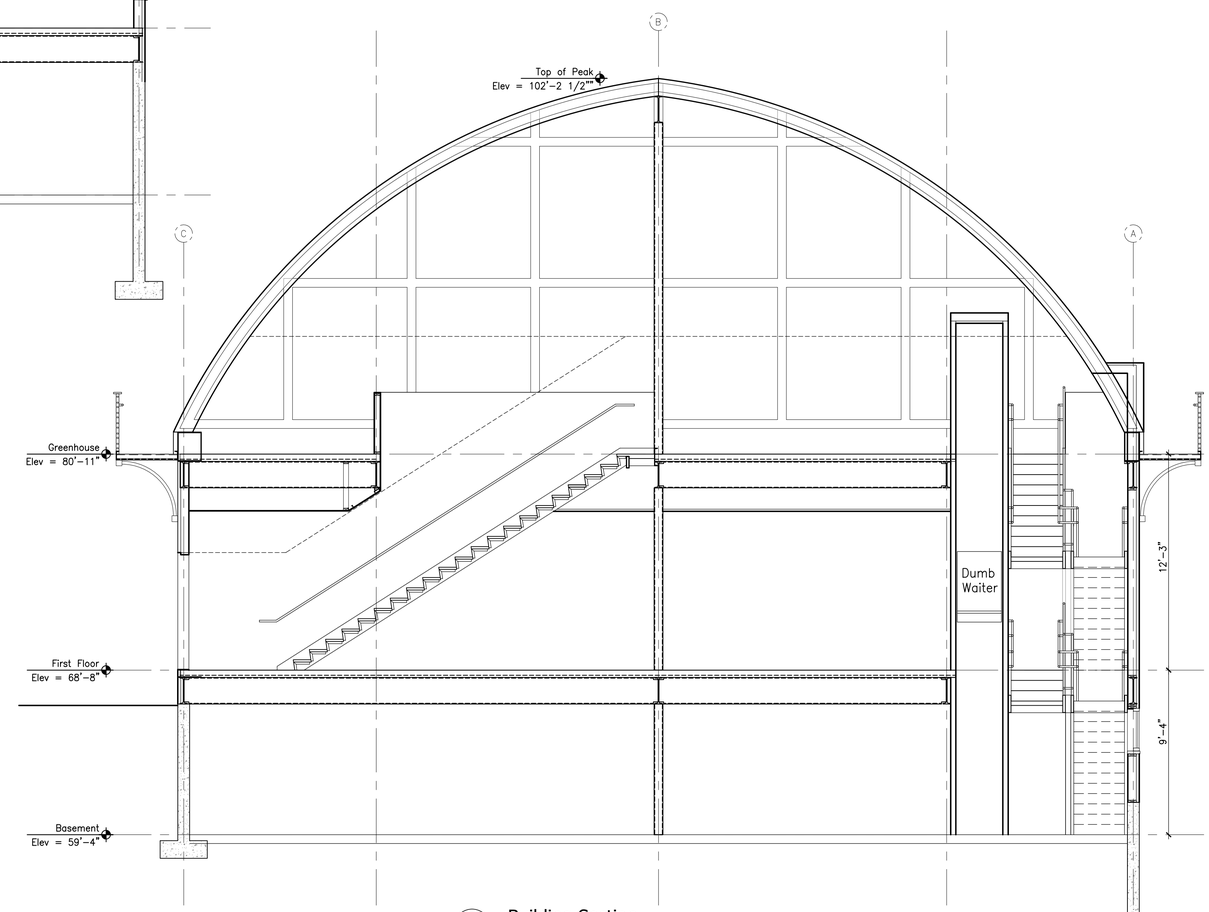

1 Building Section

Scale: 1/4" 1'-0"

David Matero
Architecture

100 Front Street
Suite 40
Bath, Maine 04530
207.671.6820
david@davidmatero.com

Plan
N

Consultants

Lincoln / Haney
Structural Engineer

Casco Bay Engineering
Greenhouse Structure

Revisions

.

Tao Yuan Greenhouse

0 Abbey Road
Brunswick, Maine

Job Number: 15.026
Date: 07.01.16
Scale: 1/4"=1'-0"

Drawing Title:

Building Sections

A3.1

Village
Review Board

Copyright 2016 David Matero
Architecture, LLC

1 Looking North from Pleasant Street
Scale: NTS

3 View from Tao Yuan Restaurant
Scale: NTS

2 View Towards Pleasant Street
Scale: NTS

David Matero
Architecture

100 Front Street
Suite 40
Bath, Maine 04530
207.671.6820
david@davidmatero.com

Consultants

Lincoln / Haney
Structural Engineer

Casco Bay Engineering
Greenhouse Structure

Revisions

.

Tao Yuan Greenhouse

0 Abbey Road
Brunswick, Maine

Job Number: 15.026
Date: 07.01.16
Scale: NTS

Drawing Title:

Perspective Model Views

A4.0

Village Review Board

Copyright 2016 David Matero Architecture, LLC

QUITCLAIM DEED
[with Covenant]

KNOW ALL MEN BY THESE PRESENTS, THAT **Terrace-Pleasant Place LLC**, a Maine limited liability company, with a place of business at Brunswick, Maine, in consideration of one dollar and other valuable consideration paid by **Cara's Place, LLC**, a Maine limited liability company with mailing address of 109 Holland Drive, Phippsburg, Maine 04562, receipt whereof is hereby acknowledged, do hereby REMISE, RELEASE, BARGAIN, SELL AND CONVEY and forever QUITCLAIM unto the said **Cara's Place, LLC**, its successors and assigns forever,

MAINE REAL ESTATE TAX PAID

Certain lots or parcels of land, together with all buildings thereon, situated in Brunswick, Cumberland County, Maine, and bounded and described in a deed from Virginia Hamilton Bailey to Patricia H. Bousfield under the name Patricia H. Lowery, dated September 1, 1958 and recorded with Cumberland County Registry of Deeds in Book 2455, Page 123 as follows:

A certain lot or parcel of land, with the buildings thereon, situate in Brunswick, County of Cumberland, State of Maine, being the same premises mortgaged to Benjamin Furbish by Robert Robertson, by mortgage deed of April 19, 1871, recorded in Cumberland Registry of Deeds in Book 385, Page 46, and therein described as a lot of land, with the buildings thereon, bounded as follows: "Beginning on the north side of Pleasant Street at a stake; thence northerly and parallel to and 5 rods distant from the east line of land formerly owned by Humphrey Given, about 20 rods, to land formerly owned by John O'Brien; thence easterly on the south line of said O'Brien land, 4 rods; thence southerly parallel with the west line, about 20 rods to said Pleasant Street; thence westerly by said Pleasant Street, 4 rods, to the first bounds; containing half an acre, more or less". The east line of said lot is bounded by a strip of land 2 rods wide from said Pleasant Street to said O'Brien land, which strip was reserved for a passage way or road in prior conveyances. The granted premises are now bounded on the west by land now or formerly of Larkin D. Snow, and on the north by the Berean Baptist Church lot. The two-rods strip, above referred to as a passage way from Pleasant Street to the O'Brien land, is now bounded on the north by said Church lot and on the east by land now or formerly of Annie B. Andrews and land now or formerly of Nellie Eaton. The grantors also convey by this deed all their right, title and interest, if any, in and to said two-rod strip.

Also one other piece or parcel of land, with the buildings thereon, situate in Brunswick, County of Cumberland, State of Maine, being the same premises which were conveyed to Herbert L. Robertson by warranty deed of Nellie S. Eaton, dated May 17, 1910, recorded in the Cumberland County Registry of Deeds in Book 861, Page 27, in said deed described as follows: "A certain lot or parcel of land situate in said Brunswick, on the northerly side of Pleasant Street, and bounded and described as follows: beginning at an

iron pipe driven in the ground on the northerly line of said street, and running thence westerly on said northerly line, one foot, to a post and land of grantee; thence by a fence and line of land of said grantee, north, 150 feet, to a fence; thence easterly by the last-mentioned fence, seven and six-tenths feet, to land of mine; thence southerly 150.2 feet, to the iron pipe at the point of beginning. Said last described line is 34.34 feet easterly on front range from the southeast corner of the dwelling house of the grantee, and 47.77 feet westerly from the northwesterly corner of my main house, measuring on the range of the main house".

There is excepted from the foregoing premises, and not hereby conveyed, the portion thereof conveyed by Patricia H. Lowery to Berean Baptist Church by deed dated June 10, 1964, and recorded in the Cumberland County Registry of Deeds in Book 2830, Page 57.

There is also excepted from the foregoing premises, and not hereby conveyed, the portion thereof conveyed by the within Grantor to Lunch Pail Equities LLC by virtue of a Warranty Deed dated April 2, 2007 and recorded in the Cumberland County Registry of Deeds in Book 24982, Page 227.

The above-described premises is conveyed together with and subject to the terms of an Indenture by and between the Town of Brunswick, Terrace Place, LLC and Boulay Properties LLC, dated May 22, 2007 and recorded in the Cumberland County Registry of Deeds in Book 25222, Page 63.

Being a portion of the premises conveyed to the within Grantor from Terrace Place, LLC by virtue of a Warranty Deed dated April 2, 2007 and recorded in the Cumberland County Registry of Deeds in Book 24982, Page 224

TO HAVE AND TO HOLD, the same, together with all the privileges and appurtenances thereunto belonging, to the said Cara's Place, LLC, its successors and assigns forever, to use and behoof forever.

AND it does **COVENANT** with the said Grantee, its successors and assigns forever, that it will **WARRANT AND FOREVER DEFEND** the premises to the said Grantee, its successors and assigns forever, against the lawful claims and demands of all persons claiming by, through, or under it.

IN WITNESS WHEREOF, the said Terrace-Pleasant Place LLC has hereunto set its hand and seal this 16 day of the month of February, 2012.

SIGNED, SEALED and DELIVERED
in presence of:

Julianna Korunovski

Terrace-Pleasant Place LLC

By: _____
Robert Gorton
Its Manager

STATE OF NEW YORK
COUNTY OF NEW YORK, ss.

February 16, 2012

Personally appeared the above named Robert Gorton, Manager of Terrace-Pleasant Place LLC and acknowledged the foregoing instrument to be his free act and deed in his said capacity, and the free act and deed of Terrace-Pleasant Place LLC.

Before me,

Julianna Korunovski
Notary Public
Print Name Julianna Korunovski
Commission Expires 12/28/14

JULIANNA KORUNOVSKI
Notary Public - State of New York
NO. 01KO6154145
Qualified in New York County
My Commission Expires 12/28/14

Affix Notarial Seal Here

Received
Recorded Register of Deeds
Feb 17,2012 04:04:31P
Cumberland County
Pamela E. Lovley

QUITCLAIM DEED
[with Covenant]

KNOW ALL MEN BY THESE PRESENTS, THAT **GF Partners LLC**, a Maine limited liability company, with a place of business at Brunswick, Maine, in consideration of one dollar and other valuable consideration paid by **Cara's Place, LLC**, a Maine limited liability company with mailing address of 109 Holland Drive, Phippsburg, Maine 04562, receipt whereof is hereby acknowledged, do hereby REMISE, RELEASE, BARGAIN, SELL AND CONVEY and forever QUITCLAIM unto the said **Cara's Place, LLC**, its successors and assigns forever,

MAINE REAL ESTATE TAX PAID

Three units known and designated as Unit 1, Unit 2 and Unit 3 in Terrace Place Condominiums, located in the Town of Brunswick, County of Cumberland and State of Maine, as shown on a Condominium Plat of Terrace Place Condominiums and accompanying Diagrammatic Floor Plans prepared by Brian Smith Surveying, Inc. and recorded in Cumberland County Registry of Deeds in Condominium Plan Book 207, Pages 651 and 652, and specific reference is made to the Declaration of Terrace Place Condominiums, a condominium created pursuant to the Maine Condominium Act of the Maine Revised Statutes, as amended, Title 33, Section 1601-101, et seq., which Declaration is dated October 22, 2007 and recorded in said Registry of Deeds in Book 25566, Page 1, as was amended by a First Amendment to Declaration of Terrace Place Condominium, dated April 22, 2010 and recorded in said Registry of Deeds in Book 27733, Page 204, as may be further amended from time to time, to which reference is hereby made and the same is incorporated by reference herein (hereinafter called the "Declaration").

Said units are conveyed together with:

1) the allocated interest in the common areas and facilities of the condominium described in the Declaration attributable to the unit as stated in Appendix II of the Declaration;

2) an exclusive right to use the limited common areas appurtenant to the units as specified in the Declaration, and shown on said Condominium Plat and Diagrammatic Floor Plans;

3) an easement in common with the owners of other units to use any pipes, wires, ducts, flues, cables, conduits, sewer, water and other public utility lines, driveway and recreation areas, and other common areas and open space, and facilities located in any of the other units or elsewhere on the property and serving the units;

4) all rights and easements in common with other units owners as described in the Declaration, including the description of property attached as Appendix I to the Declaration;

5) all fixtures of any kind now placed in or on said units; and

6) the terms of an Indenture by and between the Town of Brunswick, Terrace Place, LLC and Boulay Properties LLC, dated May 22, 2007 and recorded in the Cumberland County Registry of Deeds in Book 25222, Page 63.

Said units are conveyed SUBJECT to:

a) all easements, covenants, obligations, conditions, restrictions, reservations and encumbrances contained in or referred to in the Declaration, including, but not limited to, those contained in the description of the property attached;

b) an easement in favor of the other units to use the pipes, wires, ducts, flues, cables, conduits, sewers, water lines and other public utility lines, driveway and recreation areas, and other common areas, open space and facilities located in the unit or elsewhere on the property and serving such other units;

c) exclusive rights in favor of the owner of any unit to use the limited common areas appurtenant to such units;

d) the provisions of the Declaration and appendices thereto, by-laws and floor plans of Terrace Place Condominiums Owners Association recorded and filed simultaneously with and as part of the Declaration, as the same may be amended or modified from time to time by instrument recorded or filed in the Cumberland County Registry of Deeds, which provisions, together with any amendments or modifications thereto, shall constitute covenants running with the land and shall bind any person having at any time any interest or estate in the units, his family, servants and visitors, as if those provisions were recited and stipulated at length herein.

e) the terms of an Indenture by and between the Town of Brunswick, Terrace Place, LLC and Boulay Properties LLC, dated May 22, 2007 and recorded in the Cumberland County Registry of Deeds in Book 25222, Page 63.

Being a portion of the premises conveyed to GF Partners LLC by Lunch Pail Equities LLC by Warranty Deed recorded in the Cumberland County Registry of Deeds in Book 25388, Page 282.

TO HAVE AND TO HOLD, the same, together with all the privileges and appurtenances thereunto belonging, to the said Cara's Place, LLC, its successors and assigns forever, to use and behoof forever.

AND it does **COVENANT** with the said Grantee, its successors and assigns forever, that it will **WARRANT AND FOREVER DEFEND** the premises to the said Grantee, its successors and assigns forever, against the lawful claims and demands of all persons claiming by, through, or under it.

IN WITNESS WHEREOF, the said GF Partners LLC has hereunto set its hand and seal this 16 day of the month of February, 2012.

SIGNED, SEALED and DELIVERED
in presence of:

Julianna Korunovski

GF Partners LLC

By: _____
Robert Gorton
Its Manager

STATE OF NEW YORK
COUNTY OF NEW YORK, ss.

February 16, 2012

Personally appeared the above named Robert Gorton, Manager of GF Partners LLC and acknowledged the foregoing instrument to be his free act and deed in his said capacity, and the free act and deed of GF Partners LLC.

Before me,

Julianna Korunovski
Notary Public
Print Name Julianna Korunovski
Commission Expires 12/28/14

Affix Notarial Seal Here

JULIANNA KORUNOVSKI
Notary Public - State of New York
NO. 01KO6154145
Qualified in New York County
My Commission Expires 12/28/14

Received
Recorded Register of Deeds
Feb 17,2012 04:05:41P
Cumberland County
Pamela E. Lovley

ASSIGNMENT AND ASSUMPTION OF SPECIAL DECLARANT RIGHTS

This assignment and assumption is made by **GF Partners LLC,** a Maine limited liability company ("Assignor"), with a place of business at Brunswick, Maine, to and with **Cara's Place, LLC**, a Maine limited liability company ("Assignee"), with a mailing address of 109 Holland Drive, Phippsburg, Maine 04562.

RECITALS:

WHEREAS, Assignor is the original Declarant of certain condominium known as the "Terrace Place Condominiums" located in Brunswick, Maine (the "Condominium"), created pursuant to the provisions of the Maine Condominium Act (the "Act"), by the Declaration of Terrace Place Condominiums dated October 22, 2007 and recorded in said Registry of Deeds in Book 25566, Page 1, as was amended by a First Amendment to Declaration of Terrace Place Condominium, dated April 22, 2010 and recorded in said Registry of Deeds in Book 27733, Page 204 (collectively the "Declaration"); and

WHEREAS, Assignor is selling all currently declared and created Units it owns in the Condominium to Assignee by deed of even date herewith; and

WHEREAS, Assignor is conveying all permits, approvals and licenses, which are or may be in existence concerning the Premises, and any plans and materials furnished therewith, by assignment and assumption of even date herewith; and

WHEREAS, Assignor has agreed to convey all Special Declarant Rights reserved in the Declaration to Assignee, as provided in 33 M.R.S. § 1603-104.

NOW, THEREFORE, in consideration of the premises herein contained and other good and valuable consideration, the receipt and sufficiency of which are hereby acknowledged, and intending to be legally bound hereby, the Assignor and Assignee do hereby agree as follows:

1. Pursuant to § 1603-104 of the Act and the Declaration, Assignor, in its capacity as Declarant (as such term is defined in the Declaration), hereby transfers and assigns to Assignee all of its right, title and interest in and under the Declaration, including, without limitation, those rights reserved to the Declarant in Section 7 and any other development rights or special declarant rights as defined under §§ 1601-103 (11) or (25) of the Act, whether or not specifically denominated as such in the Declaration. TO HAVE AND TO HOLD all of the foregoing unto the Assignee, its successors and assigns from and after the date of delivery hereof, subject to the terms, covenants, conditions and provisions contained herein.

2. Assignee hereby accepts the foregoing assignment and assumes all of the duties and obligations of Declarant accruing from and after the date hereof under the Declaration, excluding, however, any matters set forth in §1603-104(e)(2)(B) of the Act.

3. Assignee shall indemnify and defend Assignor against and hold Assignor harmless from, any and all claims, liabilities and costs arising out of or relating to Assignee's failure to perform any duty or obligation of Declarant under the Declaration and with respect to the obligations of the Declarant under the Declaration or otherwise attributable to the acts or omissions of Assignee arising after the date hereof.

4. Assignee hereby releases Assignor from any and all claims, liabilities and costs arising out of or relating to Assignor's failure to perform any duty or obligation of Declarant under the Declaration or with respect to the Declaration attributable to the acts or omissions of Assignor and arising on or before the date hereof and including any matters set forth in §1603-104(e)(2)(B) of the Act, even if such liability or obligation is imposed after this transfer.

5. Assignee represents that it is in the business of developing and/or selling real estate and that Assignee is purchasing the portions of the foregoing premises which are part of the Condominium for development or resale. Assignee is not purchasing the premises, including the Condominium property, in reliance upon any express warranty or representation of Assignor (including any under 33 M.R.S. § 1604-112), and that Assignee is relying upon its own investigation and knowledge in the purchase of the premises. Assignee is not purchasing the premises for use as residential property, and any and all implied warranties of quality, whether arising under 33 M.R.S. § 1604-101 or otherwise, are expressly disclaimed and excluded, and that Assignee understands that the premises is being purchased by it "as is" and with all faults.

6. This Agreement and the obligations of the parties hereunder shall survive the closing of the sale of the premises, shall be binding upon and inure to the benefit of the parties hereto, their respective legal representatives, successors and assigns and shall be governed by and construed in accordance with the laws of the State of Maine and may not be modified or amended except by written agreement signed by both parties.

7. This Agreement may be executed in multiple counterparts, each of which shall be deemed an original, and all of which shall constitute one and the same instrument. One fully executed original of this Agreement shall be recorded in the Cumberland County Registry of Deeds.

[The balance of this page has been intentionally left blank.]

IN WITNESS WHEREOF, the parties have executed this agreement effective as of the day of recording, and being dated as of February 16, 2012.

ASSIGNOR:
GF Partners LLC

By: _____
Robert Gorton
Its Manager

STATE OF NEW YORK
COUNTY OF NEW YORK, ss. February 16, 2012

Personally appeared the above named Robert Gorton, Manager of GF Partners LLC and acknowledged the foregoing instrument to be his free act and deed in his said capacity, and the free act and deed of GF Partners LLC.

JULIANNA KORUNOVSKI
Notary Public - State of New York
NO. 01KO6154145
Qualified in New York County
My Commission Expires 12/28/14

Before me,
Julianna Korunovski
Notary Public
Print Name Julianna Korunovski
Commission Expires 12/28/14

Affix Notarial Seal Here

[Signatures continued on the following page.]

ASSIGNEE:
Cara's Place, LLC

By: _____
Name: Cecile Y Stadler
Title: Manager

STATE OF MAINE
COUNTY OF CUMBERLAND, ss. February 17, 2012

Personally appeared the above named _____, _____ of Cara's Place, LLC and acknowledged the foregoing instrument to be his/her free act and deed in his/her said capacity, and the free act and deed of Cara's Place, LLC.

Before me,

_____
~~Notary Public~~ Attorney at Law
Print Name Patrick D. Thornton
Commission Expires _____

Affix Notarial Seal Here

Received
Recorded Register of Deeds
Feb 17,2012 04:06:52P
Cumberland County
Pamela E. Lovley

SECOND AMENDMENT
TO THE DECLARATION OF
TERRACE PLACE CONDOMINIUMS

Cara's Place, LLC, ("Cara's Place"), a Maine limited liability company, is the successor declarant of Terrace Place Condominiums (the "Condominium") by virtue of the Assignment and Assumption of Special Declarant Rights dated February 16, 2012, and recorded in the Cumberland County Registry of Deeds in Book 29359, Page 150. The Declaration of Terrace Place Condominiums is recorded in said Registry in Book 25566, Page 1, and the First Amendment to the Declaration is recorded in Book 27733, Page 204. Cara's Place makes this Second Amendment pursuant to and in exercise of the Special Declarant Rights set forth in the Declaration and the First Amendment.

1. The land in Brunswick, Cumberland County, Maine, described in Exhibit A attached hereto, together with all improvements thereon, including Units 1 through 3 of the Condominium, (the "Withdrawn Land") is hereby withdrawn from the Condominium. The Withdrawn Land is no longer part of or subject to the Condominium. The description of the Withdrawn Land in Exhibit A varies somewhat from the description of the land subject to the right of withdrawal set forth in the First Amendment, but this variance is intended and is approved by the Condominium unit owners, as set forth below. The Withdrawn Land complies with the Town of Brunswick's zoning ordinance. All rights necessary for the operation of the Condominium as approved by the Town of Brunswick remain appurtenant to the Condominium.

2. A revised plat of the Condominium reflecting the foregoing withdrawal is intended to be recorded herewith, but this amendment shall be effective without regard to the recording of the revised plat.

3. The percentages of ownership of the common elements of the Condominium and liability for the common expenses are re-allocated among the remaining five units (Units 4 through 8) as follows: twenty percent (20.00%) to each unit. The votes in the unit owners' association are re-allocated as follows: one (1) vote for each unit, so there are a total of five (5) votes in the association.

4. Section 4 of the bylaws of the unit owners' association is amended so that a quorum for any meeting shall be constituted by persons entitled to cast at least 60% of the votes in the association.

5. The Declarant Control Period shall expire 60 days from the recording of this Second Amendment or upon such earlier date as Cara's Place may elect.

6. The Withdrawn Land and the Condominium share the use of a common driveway as shown on the revised plat, and reciprocal easements are hereby granted to be appurtenant to both the Withdrawn Land and the Condominium, so that each shall have the right to use, maintain, inspect, repair, and replace the said driveway and all of its related equipment and infrastructure (such as drains and utility conduits), but the owner(s) of the Withdrawn Land shall undertake no replacement or repair without advance consultation with and approval of the Condominium unit owners' association. The Condominium unit owners' association shall be responsible for the maintenance and repair of the shared driveway, and the owner(s) of the Withdrawn Land shall be responsible to pay one half of the cost thereof, which the association may collect in the same manner as the common expenses of the Condominium. The owner(s) of the Withdrawn Land shall have the right to inspect and copy (upon reasonable notice) all of the invoices and other supporting documentation relating to the maintenance costs of the shared driveway. During any winter season that the shared driveway is not used for access to the Withdrawn Land, the owner(s) of the Withdrawn Land shall not be responsible for any share of snow removal costs for the shared driveway, but if it is so used, then the snow removal costs shall be shared as otherwise provided.

7. The lamp posts on the Withdrawn Land are powered by electricity metered to the Condominium. Cara's Place shall, at its own expense, cause the electricity for these lamp posts to be metered to Cara's Place instead, within 60 days from the recording of this Second Amendment.

8. The Withdrawn Land and the Condominium property are both subject to the agreement between Boulay Properties, LLC, and Terrace–Pleasant Place, LLC, dated May 23, 2007, and recorded in the Cumberland County Registry of Deeds in Book 25222, Page 68. It is agreed that the obligations of this agreement, should they ever arise, shall be allocated 3/8 to the Withdrawn Land and 5/8 to the Condominium property.

9. Any controversy or claim arising from or relating to this amendment or the breach thereof shall be submitted to mediation by the parties using a mediator selected by the parties. If the parties cannot agree upon a mediator, or if the controversy or claim is not resolved by the mediation, then the controversy or claim shall be settled by arbitration administered by the American Arbitration Association under its Arbitration Rules for the Real Estate Industry and judgment on the award rendered by the arbitrator may be entered in any court having jurisdiction thereof. Any party may submit a dispute for arbitration in accordance with the said rules, and, unless the parties agree on the appointment of a specific arbitrator from the National Panel of Real Estate Industry Arbitrators maintained by the American Arbitration Association, then the American Arbitration Association shall appoint the arbitrator in accordance with the said rules. Subject to the requirements of the said rules and the schedule of the arbitrator, any dispute shall be heard by the arbitrator within sixty days of submission.

10. All of the unit owners of the Condominium have consented to this Second Amendment. There are no eligible mortgagees as defined by the Maine Condominium Act.

Witness our hands and seals as of the 26th day of July, 2013.

Cara's Place, LLC

By _____
Cecile Y. Stadler, Manager

Witness	
Witness	**Andrew D. Friedman** Unit 4
Witness	**Cheryl L. Davis** Unit 5
Witness	**Heather A. Wilmot** Unit 6
Witness	**Noah J. Wilmot** Unit 6
Witness	**David Hillman** Unit 7
Witness	**Susan L. Hillman** Unit 7
Witness	**Toby Tarpinian** Unit 8
Witness	**Craig Urquhart** Unit 8

STATE OF MAINE

Cumberland County July 23, 2013

Personally appeared the above named Cecile Y. Stadler, Manager of Cara's Place, LLC, and acknowledged before me the foregoing instrument to be her free act and deed in her said capacity and the free act and deed of said company.

Lisa M. Wallace

Notary Public/Attorney at Law

LISA M. WALLACE
Notary Public, State of Maine
My Commission Expires 6/19/2016

Print or type name as signed

EXHIBIT A

Land Withdrawn from Terrace Place Condominiums

The land in Brunswick, Cumberland County, Maine, bounded and described as follows:

Beginning at a point in the westerly line of land now or formerly of Boulay Properties, LLC, at the northeasterly corner of land now or formerly of Cara's Place, LLC; thence S 76° 52' 19" W by and along said Cara's Place land 4.17 feet to an angle point; thence N 43° 07' 41" W by and along said Cara's Place land 22.93 feet to an angle point; thence S 76° 52° 19" W by and along said Cara's Place land 70.26 feet to the easterly line of land now or formerly of the United States Post Office; thence N 06° 36' 49" W by and along said Post Office land 87.75 feet; thence N 83° 22' 29" E through a shared driveway 76.45 feet to the westerly line of said Boulay Properties land; thence S 13° 07' 41" E by and along said Boulay Properties land 98.39 feet to the point of beginning. Bearings used in the foregoing descriptions are based on magnetic north in 2013.

Art Boulay

JENSEN·BAIRD GARDNER·HENRY

Attorneys at Law

KENNETH M. COLE III
NICHOLAS S. NADZO
FRANK H. FRYE
DAVID J. JONES
MICHAEL A. NELSON
RICHARD H. SPENCER, JR.
ALAN R. ATKINS
RONALD A. EPSTEIN
WILLIAM H. DALE
JOSEPH H. GROFF III
F. BRUCE SLEEPER
DEBORAH M. MANN

LESLIE E. LOWRY III
PATRICIA M. DUNN
MICHAEL J. QUINLAN
R. LEE IVY
FRANK K. N. CHOWDRY
NATALIE L. BURNS
SALLY J. DAGGETT
BRENDAN P. RIELLY
SUZANNE R. SCOTT
LORAINE L. HITE
MARCIA G. CORRADINI
JONATHAN T. NASS

TEN FREE STREET
P.O. BOX 4510
PORTLAND, MAINE 04112-4510
(207) 775-7271 (Phone)
(207) 775-7935 (Fax)

www.jbgh.com

MERTON G. HENRY
JAMES E. KAPLAN
OF COUNSEL

RAYMOND E. JENSEN
(1908-2002)
KENNETH BAIRD
(1914-1987)
M. DONALD GARDNER
(1918-2003)

YORK COUNTY OFFICE
11 MAIN STREET, SUITE 4
KENNEBUNK, MAINE 04043
(207) 985-4676 (Phone)
(207) 985-4932 (Fax)

May 24, 2007

Donald H. Gerrish, Town Manager
Brunswick Town Offices
28 Federal Street
Brunswick, ME 04011-1583

Re: Town of Brunswick, Terrace Place, LLC and Boulay Properties, LLC

Dear Don:

Enclosed herewith please find an original Indenture for your signature in regard to Terrace Place. I have spoken to Geoff Hole and he indicated the best thing to do was simply send it to you for execution with the request that you return it directly to me so that I can get this document recorded. As you are aware, the building permit for the improved project has been delayed pending our receipt of Mr. Boulay's signature to this document, which has only just occurred.

If you have any question, please let me know. Otherwise, I believe with your signature, this project and the improvements to Terrace Place itself will be able to commence. Thank you very much for your attention to this matter.

With best regards.

Very truly yours,

Kenneth M. Cole III

KMC/lts
Enclosure
cc: Robert Gorton (letter only, via e-mail)

INDENTURE

This Indenture is entered into this 22nd day of May, 2007, by and between the Town of Brunswick (the "Town"), Terrace Place, LLC and Boulay Properties, LLC.

WITNESSETH:

WHEREAS, Terrace Place, LLC owns property at 22-24 Pleasant Street identified on Brunswick Tax Map U-13 as Lot 52 (the Terrace Property); and

WHEREAS, Boulay Properties, LLC owns property at 18 Pleasant Street identified on Brunswick Tax Map U-13 as Lot 53 (the Boulay Property), which abuts the Terrace Property to the east; and

WHEREAS, the Town owns a municipal parking lot off Cumberland Street identified on Brunswick Tax Map U-13 as Lot 65A (the Town's Property), which abuts the Terrace Property to the east and the Boulay Property to the north; and

WHEREAS, the Town has maintained a right of way for many years in the vicinity of the westerly boundary of the Boulay Property and the easterly boundary of the Terrace Property, running from the southwest corner of the Town's Property southerly to Pleasant Street; and

WHEREAS, no evidence exists of the grant of the right of way to the Town; and

WHEREAS, the description of the right of way prior to 1908 differs from the description in deeds exchanged in 1910 between the predecessors of Terrace Place, LLC and Boulay Properties, LLC; and

WHEREAS, the 1910 exchange of deeds has created confusion regarding the location of the right of way; and

WHEREAS, the current physical location of the right way, particularly on the Pleasant Street end, is wholly outside both the 1908 and 1910 descriptions; and

WHEREAS, the Town, Terrace Place, LLC and Boulay Properties, LLC have arrived at an agreement that will eliminate the need for extensive legal work or actions and related survey work;

NOW, THEREFORE, in consideration of the above and the covenants and agreements contained herein, the Town, Terrace Place, LLC and Boulay Properties, LLC agree as follows:

1. Boulay Properties, LLC and Terrace Place, LLC grant to the Town an 18-foot easement, for two-way public vehicular and pedestrian travel over Terrace Place, so-called, as shown on Attachment A, running from Pleasant Street to said Town Hall Place, and an accompanying easement over the sidewalks adjoining said right-of-way. If the Town ever formally discontinues said right of way, the parties agree that no damages will be owing to Terrace Place, LLC and/or Boulay Properties, LLC, their successors and assigns.

2. Boulay Properties, LLC and Terrace Place, LLC grant to the Town the right to maintain and improve the above-described easements.

3. Boulay Properties, LLC releases to Terrace Place, LLC all its right title and interest in any land area westerly of the westerly boundary of the above-described right-of-way.

4. Terrace Place, LLC releases to Boulay Properties, LLC all its right title and interest in any land area easterly of the westerly boundary of the above described right-of-way.

5. The Town acknowledges that traffic currently exits through its premises and agrees it may continue to do so, subject to the Town's right to terminate the same by formal notice to Terrace Place, LLC and Boulay Properties, LLC, if required, in which event the parties agree that no damages will be owing to Terrace Place, LLC and/or Boulay Properties, LLC, their successors and assigns.

6. The Town, Terrace Place, LLC and Boulay Properties, LLC acknowledge that Terrace Place, LLC plans to construct and maintain eight (8) condominiums and various parking spaces westerly of the westerly boundary of the above-described right-of-way and that Boulay Properties, LLC plans to construct and maintain parking spaces easterly of the easterly

boundary of the above-described right-of-way and each party confirms the others right to do so, all also as shown on said Exhibit A.

7. This Indenture shall be a perpetual obligation of the Town, Terrace Place, LLC and Boulay Properties, LLC and their successors and assigns; shall attach to the Town's Property, the Terrace Property and the Boulay Property; and shall run with the land.

8. The Town, Terrace Place, LLC and Boulay Properties, LLC have incorporated herein a document as Attachment A which the parties agree properly depicts the above easements, which document is entitled Traffic Study and dated July, 2006 and prepared by Normand Associates Architects.

9. The provisions of this Indenture may not be modified without the express written recordable consent of the Town, Terrace Place, LLC and Boulay Properties, LLC.

10. The provisions of this Indenture may be enforced by the Town, Terrace Place, LLC and Boulay Properties, LLC.

WITNESS

TOWN OF BRUNSWICK

By: _____
Donald H. Gerrish
Its Town Manager,
Duly Authorized

WITNESS

TERRACE PLACE, LLC

By: _____
Robert Gorton
Its Manager,
Duly Authorized

WITNESS

BOULAY PROPERTIES, LLC

By: _____
Its President,
Duly Authorized